THIS DOCUMENT IS THE PROPERTY OF KEYSTONE ELECTRONICS CORP. AND SHALL NOT BE REPRODUCED, DISTRIBUTED OR USED AS A BASIS FOR MANUFACTURE WITHOUT PRIOR WRITTEN PERMISSION FROM KEYSTONE ELECTRONICS CORP.

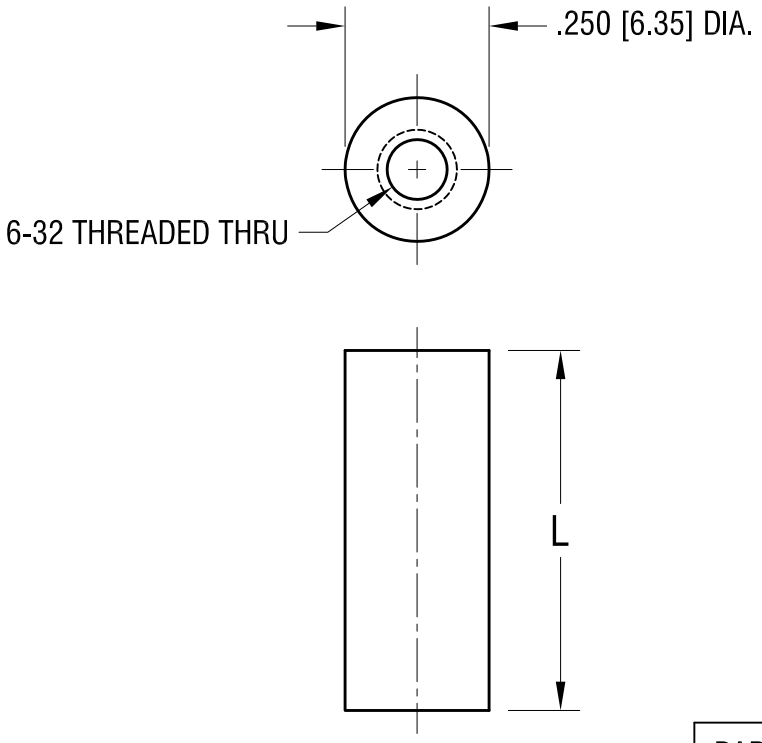

PART NO.	'L' DIM.
1548A	.250 [6.35]
1548B	.375 [9.52]
1548C	.500 [12.70]
1548D	.625 [15.88]
1548E	.750 [19.05]
1548F	1.000 [25.4]

KEYSTONE ELECTRONICS CORP.

www.keyelco.com • NEW HYDE PARK, NY 11040 • Tel (516) 328-7500

PART NAME: THREADED ROUND STANDOFF

MATERIAL: BRASS

FINISH: ZINC PLATE

DRN BY: BOONE | DATE: 6.11.82

APP'D: LN | SCALE: 3X

TOLERANCES INCH [MM]
DECIMAL ± .005 [± 0.13]
ANGULAR ± 1°
UNLESS OTHERWISE SPECIFIED

CODE: C

DWG NO. 1548A-F

DATE	DESCRIPTION	REV.
5.5.93	REVISED	A