REVISIONS			
REV	DESCRIPTION	DATE	APPROVED
01_0	RELEASED	4-18-91	DDD

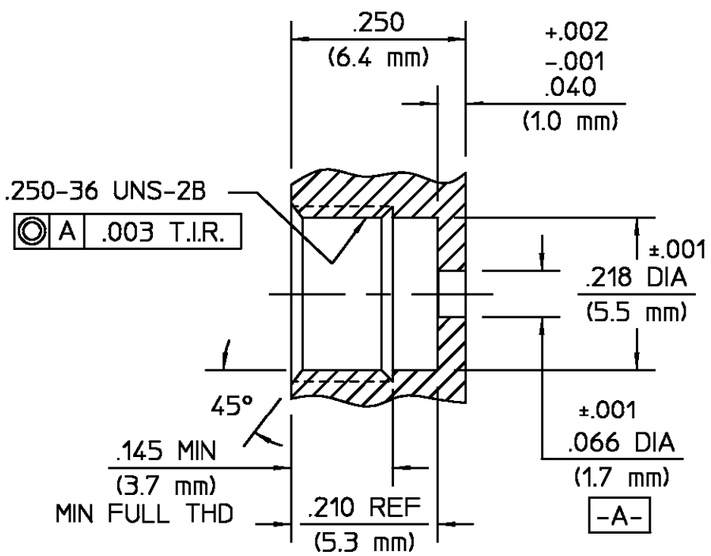

RECOMMENDED MOUNTING HOLE

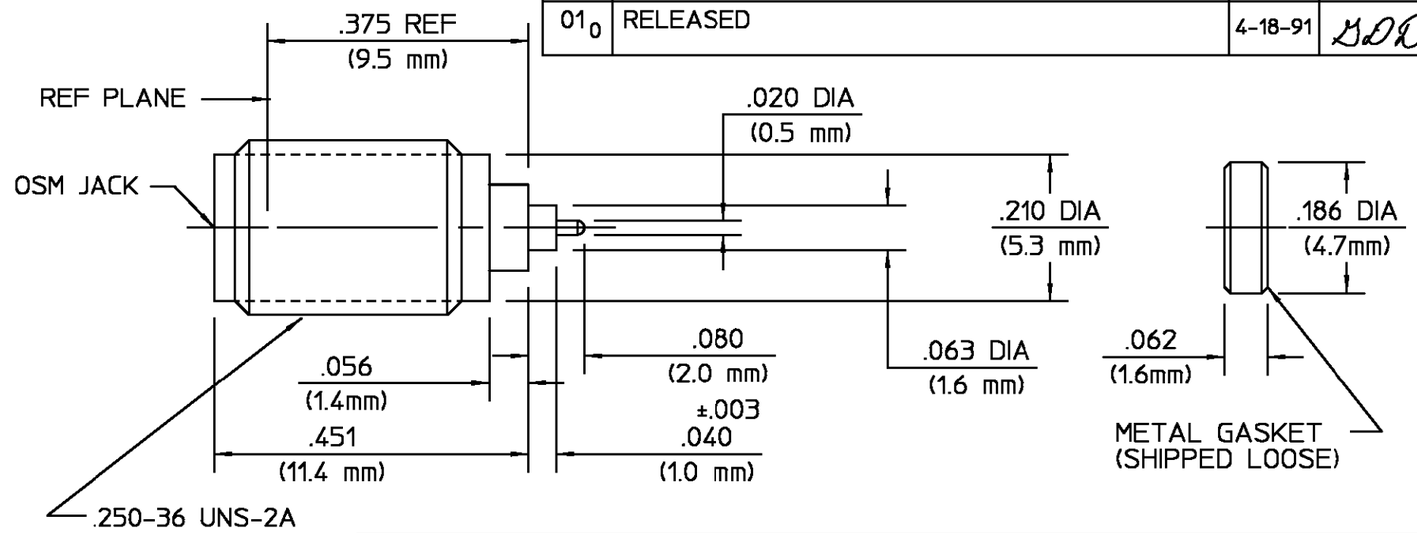

ELECTRICAL	MECHANICAL	ENVIRONMENTAL
Nominal Impedance (Ohms) 50	Interface Dimensions MIL-STD-348A FIG 310.2	Temperature Rating -65°C To +125°C
Frequency Range (GHz) DC - 26.5	Recommended Mating Torque N/A	Vibration - MIL-STD-202, Method 204, Condition D, 20G's
Volt Rating (VRMS MAX) 335 @ Sea Level	Mating Characteristics:	Shock - MIL-STD-202, Method 213, Condition I
VSWR 1.04 + (.009 F(GHz))	Insertion (MAX Lbs) 3.0	Thermal Shock MIL-STD-202, Method 107, Condition B
Insertion Loss (dB MAX) $.05\sqrt{F(GHz)}$	Withdrawal (MIN Oz) 1.0	Except High Temp 115°C
RF Leakage (dB MIN) -(100 - F(GHz))	Force To Engage (In/Lbs MAX) 2.0	Moisture Resistance - MIL-STD-202, Method 106
Corona, 70,000 Ft (VRMS MIN) 333	Force To Disengage (In/Lbs MAX) 2.0	Corrosion - MIL-STD-202, Method 101, Condition B, 5% salt spray
Dielectric Withstanding Voltage (VRMS MIN) 1000 @ Sea Level	Center Contact Captivation	Leak Test - MIL-STD-202, Method 112, Condition C, Procedure I, 1 x 10 CC/Sec
Contact Resistance (Milliohms MAX)	Axial 6.0 Lbs	
Center Contact 10.0	Radial N/A	
Outer Contact 2.0	Weight (Grams) T.B.D.	
RF High Potential (VRMS MIN @ 5 MHz) 670 @ Sea Level		
I.R.(Megohms) 5000		

COMPONENT	MATERIAL	FINISH
HOUSING	STAINLESS STEEL PER ASTM-A484 AND ASTM-A582, TYPE 303	GOLD PLATE PER MIL-G-45204 OVER NICKEL PLATE PER QQ-N-290
DIELECTRIC	TFE FLUOROCARBON PER ASTM-D-1457	N/A
CTR CONTACT	BERYLLIUM COPPER PER ASTM B196, ALLOY C17300, CONDITION H	GOLD PLATE PER MIL-G-45204 OVER COPPER PLATE PER MIL-C-14550
CONTACT EXT	IRON-NICKEL-COBALT ALLOY PER MIL-I-23011 (KOVAR)	GOLD PLATE PER MIL-G-45204
METAL GASKET	SAE C12L14 STEEL	SILVER PLATE PER QQ-S-365
HERMETIC SEAL	GLASS BEAD	N/A

UNLESS OTHERWISE SPECIFIED DIMENSIONS ARE IN INCHES
TOLERANCE ON
FRAC. ± 1/64 DEC. ±.005 ANGLES ± 1°

DRAWN BY M.Y. DATE 4-18-91
CHECKED BY C.W. 4-18-91
APP'D BY DDD 4-18-91

AMP

AMP Incorporated
140 Fourth Avenue
Waltham, MA 02451-7599

These drawings and specifications are the property of Omni Spectra Incorporated and shall not be reproduced or copied or used in whole or in part as the basis for the manufacture or sale of item(s) without written permission.

USE ASS'Y PROCEDURE
408-04847
NO. A.P. (20-600)

TITLE OSM PANEL FEEDTHRU JACK RECEPTACLE HERMETICALLY SEALED

SIZE	CODE IDENT NO.		REV
B	26805	2058-5119-00	01_0
SCALE 5:1			SHEET 1 OF 1

CUSTOMER DRAWING

AMP PART # 1053226-1
SHEET 1 OF 1 REV A