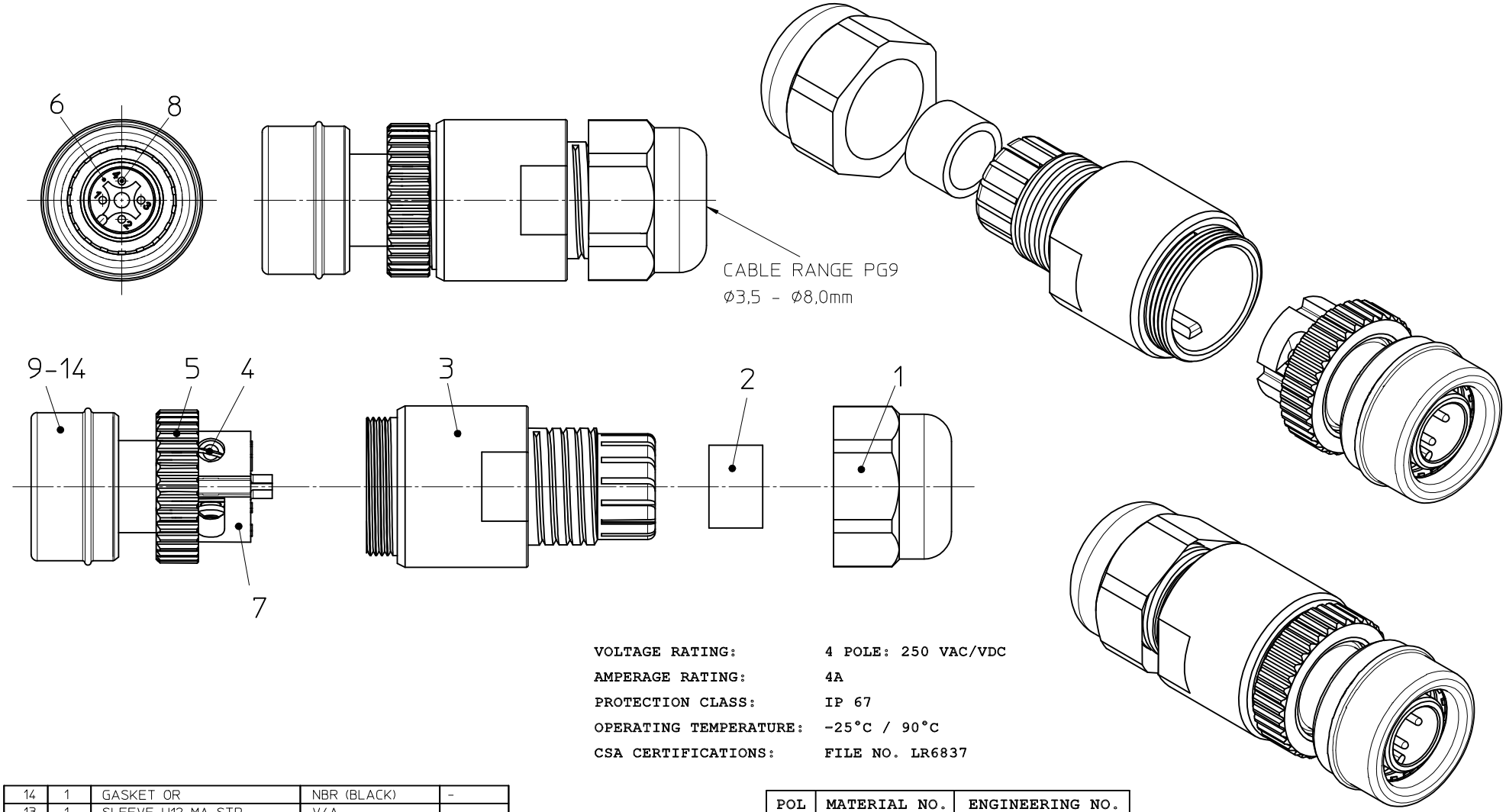

VOLTAGE RATING: 4 POLE: 250 VAC/VDC
AMPERAGE RATING: 4A
PROTECTION CLASS: IP 67
OPERATING TEMPERATURE: -25°C / 90°C
CSA CERTIFICATIONS: FILE NO. LR6837

POL	MATERIAL NO.	ENGINEERING NO.
4	1200850020	WA4006-328

ITEM	QTY	DESCRIPTION	MATERIAL	FINISH
14	1	GASKET OR	NBR (BLACK)	-
13	1	SLEEVE U12 MA STR	V4A	-
12	1	SLEEVE MA	V4A	-
11	1	SPRING U12U	V4A	-
10	1	GASKET	EPDM (BLACK)	-
9	1	GASKET	FPM (RED)	-
8	4	CONTACT MA U12 FA	BRASS	NI
7	1	INSERT U12 FA	PA (BLACK)	-
6	1	INSERT U12 4P AC	PA (BLACK)	-
5	1	LOCK RING FA	PA (BLACK)	-
4	4	SCREW FA	ST	-
3	1	ENDSLEEVE STR PG9 FA	PA (BLACK)	-
2	1	GROMMET PG9	CR/NBR (BLACK)	-
1	1	HUT NUT FA PG9	PA (BLACK)	-

ENTER DESCRIPTION
EC NO: IPG2016-1096
DRWN:RSCHIEBER 2016/02/16
CH'KD:REISSNER 2016/02/16
APPR:RSILLER 2016/03/01
DESCRIPTION
REV 2

QUALITY SYMBOLS
▼=0
Ⓒ=0

GENERAL TOLERANCES (UNLESS SPECIFIED)

	mm	INCH
4 PLACES	± ---	± ---
3 PLACES	± ---	± ---
2 PLACES	± 0.05	± ---
1 PLACE	± 0.30	± ---
0 PLACE	± 0.50	± ---

ANGULAR ± 1 °
DRAFT WHERE APPLICABLE MUST REMAIN WITHIN DIMENSIONS

DIMENSION STYLE: MM ONLY
SCALE: 2:1
DESIGN UNITS: METRIC
THIRD ANGLE PROJECTION

DRAWN BY: RSCHIEBER DATE: 2016/02/08
CHECKED BY: REISSNER DATE: 2016/02/08
APPROVED BY: RSILLER DATE: 2016/03/01

TITLE: FA U12 4P AC MA STR PG9 BK V4A

molex

MATERIAL NO.: SEE TABLE
DOCUMENT NO.: SD-120085-009
SHEET NO.: 1 OF 1
SIZE: A3

THIS DRAWING CONTAINS INFORMATION THAT IS PROPRIETARY TO MOLEX INCORPORATED AND SHOULD NOT BE USED WITHOUT WRITTEN PERMISSION