CUSTOMER'S NAME

MOUSER ELECTRONICS

| ALPHA REFERENCE NO. |
|---|
| SP18030057 |

# SPECIFICATION

| PART NO. | ALPHA MODEL NAME |
|---|---|
| | RV24AF-10-20K-XXX-LA |
| | XXX for ( B1K~500K ) |
| | |
| | |
| | |

| MODEL NAME |
|---|
| MODEL NO. |

| APPROVAL |
|---|
| |

| PREPARED BY | REVIEWED BY | APPROVED BY |
|---|---|---|
| 鄧 2018.3.09 彩霞 | 李 2018.3.10 延玲 | 韋 2018.3.12 祖衛 |

ALPHA 80% 2018/03/09 ENG-013 DG15672

ALPHA

台灣艾華電子工業股份有限公司

33045 桃園市桃園區中正路 1221 號 9 樓

TAIWAN ALPHA ELECTRONIC CO., LTD.

9F, No. 1221, Chung Cheng Rd.,Taoyuan Dist., Taoyuan City ,330 Taiwan

Tel: 886-3-3577799 Fax: 886-3-3577700

EMAIL: sales@taiwanalpha.com.tw

URL: http//www.taiwanalpha.com

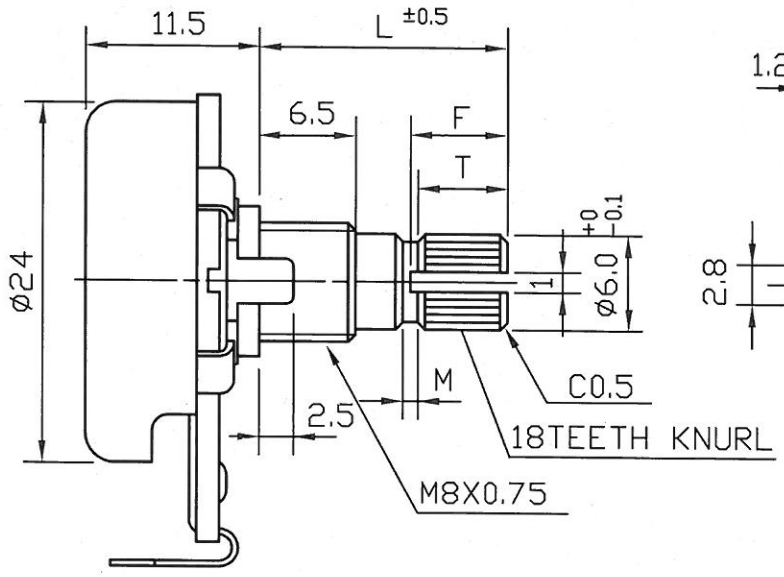


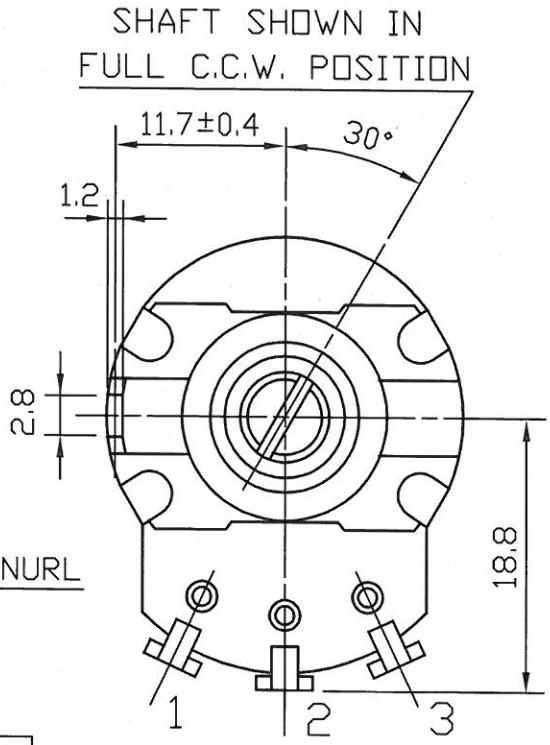


| | L | T | F | M |
|---|---|---|---|---|
| | 15 | 6 | 6.5 | 1.0 |
| ✓ | 20 | 10 | 11 | 2.0 |
| | | | | |

● — 300° ROTATION
MONO UNIT

NUT 2 PCS

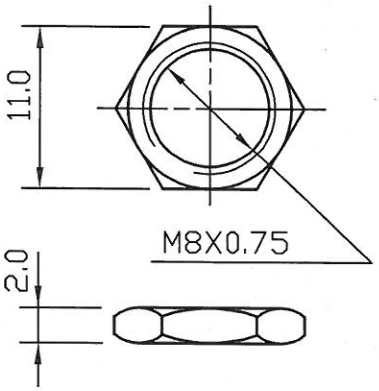


WASHER 2 PCS t=0.4

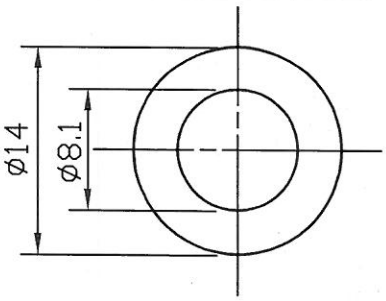


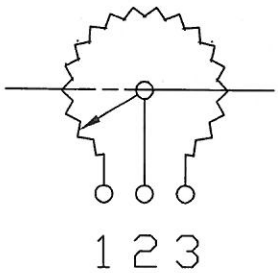


CIRCUIT

| NO. | DATE | DESCRIPTION | MODEL NAME |
|---|---|---|---|
| | | | |
| | | | |
| | | | -LA |
| | | | RV24AF-10-(L)K-XXX-0050 |

| TOL. UNLESS OTHERWISE STATED | DIMENSION | SCALE | DRAWN BY | CHECKED BY | APPROVED BY | DRAWING NO. |
|---|---|---|---|---|---|---|
| less than 10 ±0.3<br>above 10 ~ 30 ±0.5<br>above 30 ~100 ±1.0<br>above ±5° | mm | 2:1 | 潘 2013.4.01 坤 | 韋 2013.4.01 祖衛 | 吳 2013.4.01 宏毅 | |

TAIWAN ALPHA ELECTRONIC CO., LTD.

| | | | |
|---|---|---|---|
| ACUSTOMER' S NAME | | NOTE | DATE |
| CUSTOMER' S PART NAME | | | |
| CUSTOMER' S DRAWING NO. | | | |

## 1. MECHANICAL SPECIFICATION

| | | |
|---|---|---|
| 1. OUTSIDE DIMENSION | append fig. | |
| 2. TOTAL ROTATION ANGLE | degree | 300 ±5° |
| 3. TOTAL TRAVEL STROKE | mm | ±0.5 |
| 4. NUT WIRING STRENGTH | twisting moment | less than 9 kgf.cm |
| 5. SCREW TIGHTENING FORCE | torsional moment | less than kgf.cm |
| 6. ROTATION TORQUE | speed 60 deg/sec. | 20~200 gf.cm |
| 7. SLIDING FORCE | speed 20mm/sec | gf.cm |
| 8. SHAFT LEVER STRENGTH | pulling pushing | more than kgf.cm |
| 9. SHAFT LEVER WOBBLE | within mm (bending moment gf.cm) | |
| 10. SHAFT LEVER STOP STRENGTH | more than 6 kgf.cm (static load) / 60 sec | |
| 11. TERMINAL STRENGTH | more than 500 gf.cm / 10 ± 1 sec | |
| | soldering heat 350±5°C/3sec. 200gf.cm/10 ±1sec | |
| | resist change within ± 2% | |
| 12. CLICK POSITION & TORQUE | gf.cm | |
| 13. SWITCH WORKING ANGLE (STROKE) | degree (mm) | |
| 14. SWITCH WORKING TORQUE (FORCE) | gf.cm | |
| 15. SWITCH CIRCUIT | | |

## 2. ELECTRICAL SPECIFICATION

| | | |
|---|---|---|
| 1. OVERALL RESISTANCE & TOLERANCE | terminal 1-3 | 1K~500K Ω± 20 % |
| 2. TAP RESISTANCE & TOLERANCE | terminal 1-4 | Ω± % |
| 3. RATED WATTAGE | temp 0~50°C | 0.5 W |
| 4. MAXIMUM WORKING VOLTAGE | | 500 V |
| 5. RESISTANCE TAPER MEASURING POINT & TOLERANCE | | 50 %point<br>40 ~ 60 % |
| 6. RESIDUAL RESISTANCE | terminal 1/3 side | less than 20/30 Ω |
| 7. TAP RESIDUAL RESISTANCE | terminal 4 side | less than 100 Ω |
| 8. SLIDE NOISE | speed 60° / 1 sec | less than 47 mV |
| 9. INSULATION RESISTANCE | more than 100 | MΩ(DC 500 V) |
| 10. WITHSTAND VOLTAGE | AC 500 V 1 minute | |
| 11. TRACKING ERROR | | |
| 12. SWITCH CONTACT RESISTANCE | MΩ | less than mΩ |
| 13. SWITCH RATING | | |

**3. USABLE TEMPERATURE RANGE: from –10°C to 70°C**

**4. VR LIFE 15,000 ± TIMES**

**RESISTANCE CHANGE: within ± %**

**SLIDE NOISE : less than mV**

**SW LIFE ± TIMES**

**CONTACT RESISTANCE: less than mΩ**

## SHAFT

| MATERIAL | ANGLE OF FLAT OR SLOT θ / at | DIMENSION M | L | F | T |
|---|---|---|---|---|---|
| | | | 20 | | |

| MODEL NAME | DRAWING NO. |
|---|---|
| RV24AF-10-20K-B1K~500K-LA | |

| REFERENCE NO. | REV |
|---|---|
| | |

Alpha Product ENG-013 DG15672

# STANDARD RESISTANCE TAPER

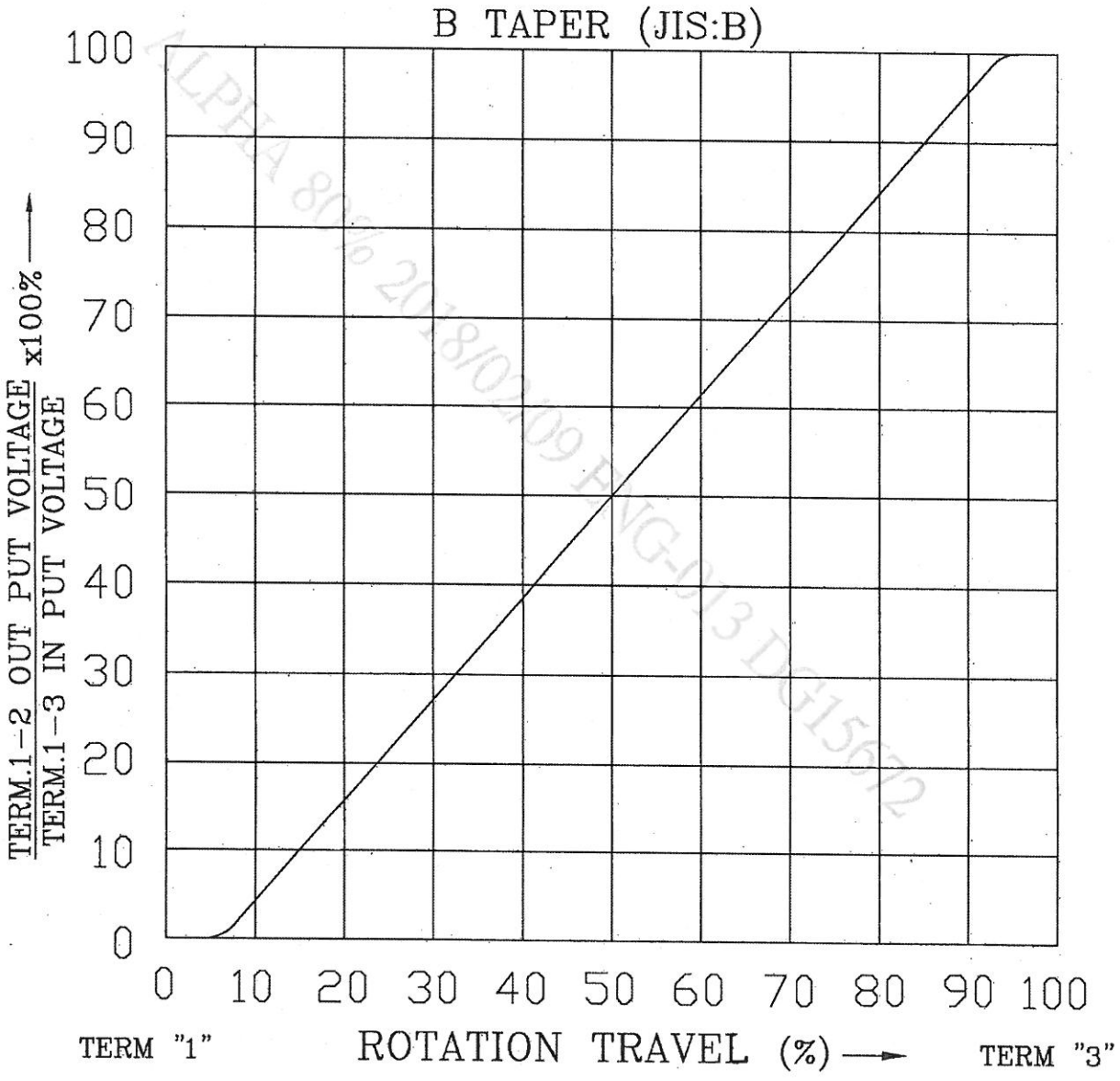


ALPHA 80% 2018/02/09 PNG-013 DG15672

| NO. | DATE | DESCRIPTION | MODEL NAME |
|---|---|---|---|
| | | | |
| | | | |
| | | | |
| | | | |

| TOL. UNLESS OTHERWISE STATED | DIMENSION | SCALE | DRAWN BY | CHECKED BY | APPROVED BY | DRAWING NO. |
|---|---|---|---|---|---|---|
| less than 10 ±0.3<br>above 10 ~ 30 ±0.5<br>above 30 ~100 ±1.0<br>above ±5° | mm | | 何 90.8.21 建志 | 王 90.8.21 茂松 | 王 90.8.21 茂松 | |

TAIWAN ALPHA ELECTRONIC CO., LTD.

# 可變電阻無鉛焊錫與保管條件共通規格書

## Common Specification of Lead-Free Soldering and Storage conditions for Potentiometers

以下焊錫條件以可變電阻置於單層 1.6mm 厚度之印刷電路板上測試爲基準.

**The specification below is based on testing results of 1.6mm thickness single layer printed circuit board.**

1. 手工焊錫條件：

   **For Manual Soldering：**

   1-1 操作溫度最高 350°C，操作時間 3 秒以內。

   **To be performed within 3 seconds at 350°C or below.**

2. 自動或半自動機台焊錫條件：

   **For Automated or Semi-Automated Soldering Equipments:**

   2-1 使用發泡式且比重 0.82 以上的助焊劑，發泡高度以印刷電路板厚度一半爲標準，且助劑不能流入可變電阻基板表面及印刷電路板表面。

   **Flux of 0.82 specific gravity, applied by foam fluxer, shall be used. Foam head shall be limited to the height which is half thickness of printed circuit board to be soldered. No flux should be allowed to run up onto resistive element board of potentiometer and the surface of printed circuit board.**

   2-2 預熱時間不超過兩分鐘，焊錫接面 (即印刷電路板底) 最高預熱溫度不超過 100°C。

   **Regarding preheating, the entire flow duration should not exceed 2 minutes, and soldering surface temperature (undersurface of PCB) shall be settled within 100°C.**

   2-3 焊錫過程機台設定溫度在 260°C 以下、 4 秒以內。

   **Solder Dipping is to be performed within 4 seconds at 260°C or below.**

3. 若回轉型電位器是塑膠軸且帶有檔位，請將主軸先調整至其中一個檔位或中心檔位上才可以進行焊錫作業。

   **For rotary potentiometer with plastic shaft which have centre detent or multiple detents, the shaft should be settled in relevant detent position prior to soldering process.**

4. 手工焊錫、自動或半自動機台焊錫不得超過一回。

   **Regardless of soldering facility and method, solder dipping or solder smearing must not be carried out more than 1 time.**

註: 本項焊錫溫度條件不適用於回流焊接作業設備。

**Remarks: This specification is not recommended for and applicable in reflow soldering.**

焊錫注意事項:

**Caution for soldering:**

如圖所示，請避免 PCB 上層表面有焊錫

**Please avoid soldering on upper surface of P.C.B. as shown.**

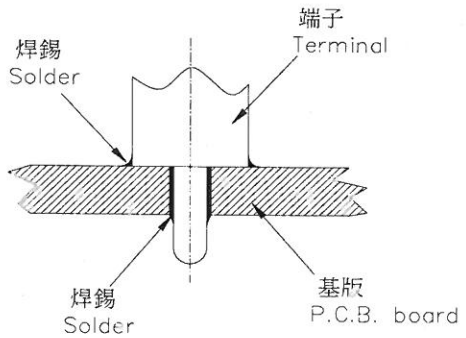


5. 保管條件(Storage conditions):

   產品需儲存在原始的包裝,以及保持常溫常濕、避免陽光直射、遠離任何腐蝕性氣體. 產品需盡快完全地使用完,建議最慢不要超過交貨後 6 個月. 產品經拆封後, 全部的數量都需迅速地使用完.

   **The products shall be stored in the original packaging and kept at room temperature and humidity, out of direct sunlight, and away from any and all corrosive gas. The products shall be completely used as soon as possible, but no longer than 6 months from the date of delivery. Once product packaging is opened, the complete quantity of such products shall be promptly used.**