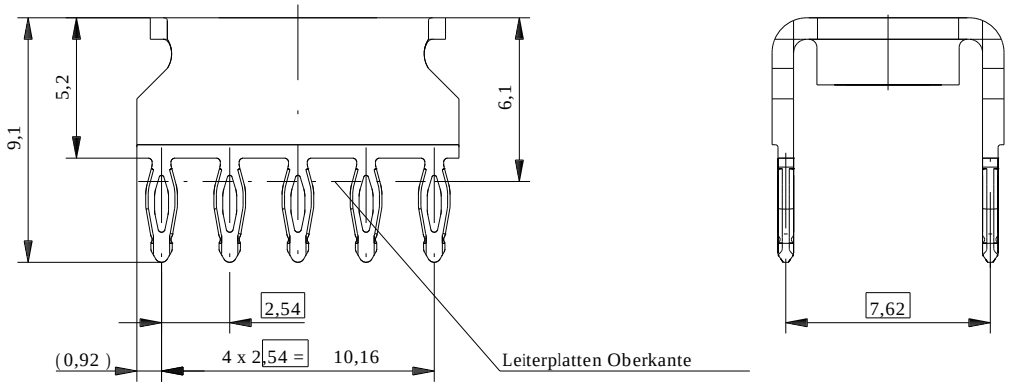

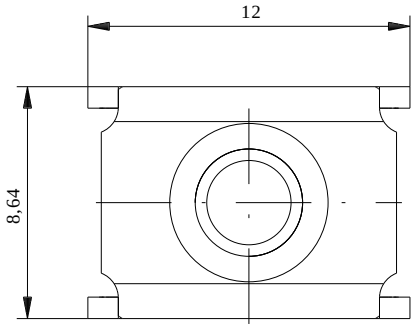

Leiterplattenbohrbild
PCB drillhole pattern

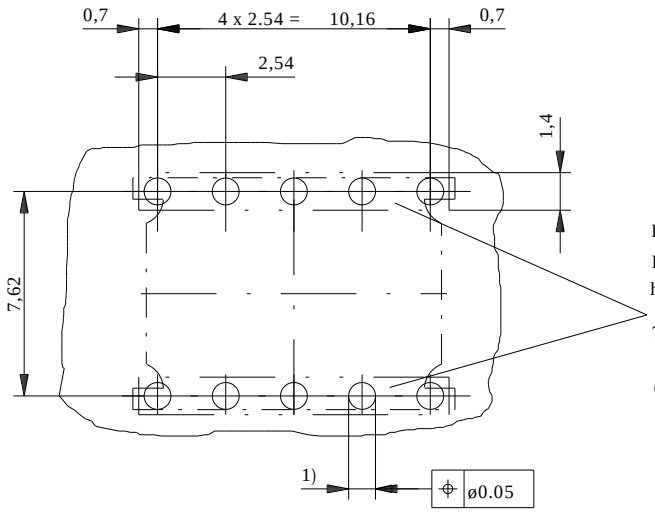

Schichtaufbau im metallisierten Loch siehe Zeichnung 114124

diameter of drilled hole see drawing 114124

1) ø 1,0 $^{+0,09}_{-0,06}$ Durchmesser des metallisierten Loches

ø 1,0 $^{+0,09}_{-0,06}$ Diameter of finished plated-through hole

ø 1,15 ± 0,025 Bohrungsdurchmesser des Loches

ø 1,15 ± 0,025 Diameter of drilled hole

Dieser Bereich muß gleiches Potential auf LP-Oberfläche haben

This area must have same electrical potential on surface of PCB

214782	M4
214781	M3
214780	6-32UNC
214779	8-32UNC
Ident-Nr. Part No.	Gewinde thread

Information:	Tolerances	All Dimensions in mm	Scale 5:1
All rights reserved. Only for information. To insure that this is the latest version of this drawing, please contact one of the ERNI companies before using.	Subject to modification without prior notice. Drawing will not be updated.		Designation SVA 10-polig EE Power Bug 10pin EE
b 11.05.2006	ERNI www.ERNI.com		204818 I
Index Date	H:00057487.SZA		EPSVA

Consider protection memo from DIN 34

Mouser Electronics

Authorized Distributor

Click to View Pricing, Inventory, Delivery & Lifecycle Information:

ERNI Electronics:

214779