THIS DRAWING IS UNPUBLISHED. RELEASED FOR PUBLICATION 20
© COPYRIGHT 20 BY - ALL RIGHTS RESERVED.

REVISIONS

P	LTR	DESCRIPTION	DATE	DWN	APVD
	A	INITIAL RELEASE	29APR2015	DL	CW
	A1	ECR-18-008950	01AUG2018	KW	CW

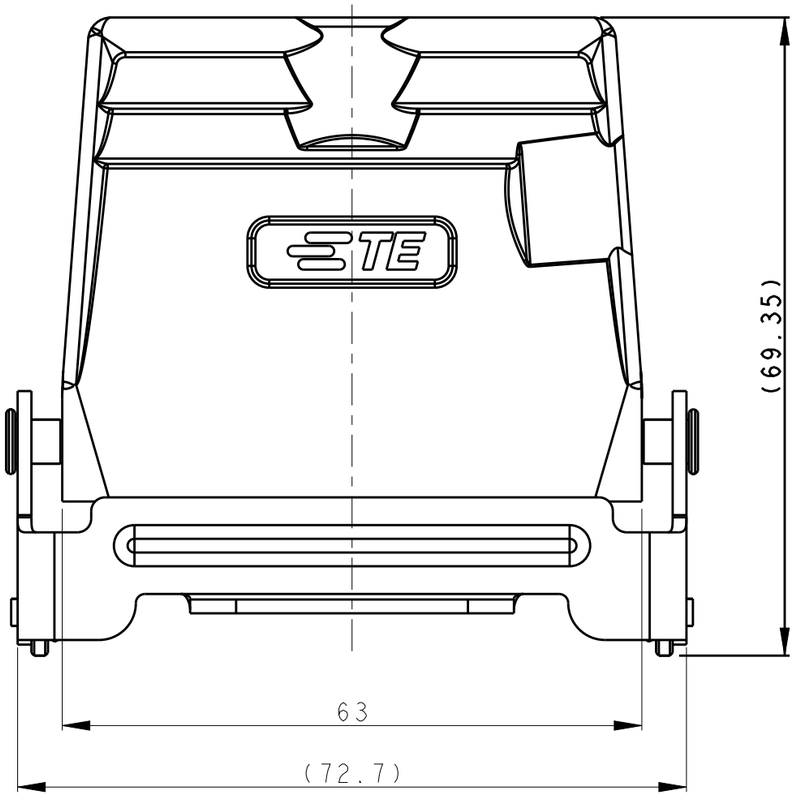

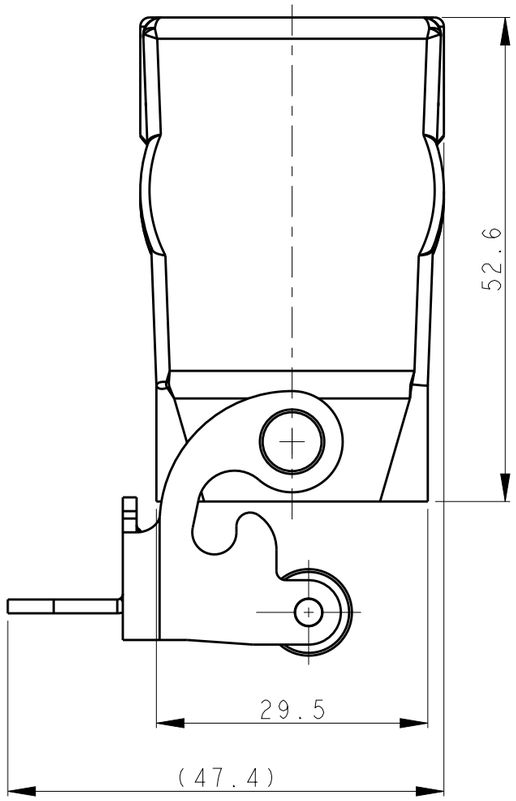

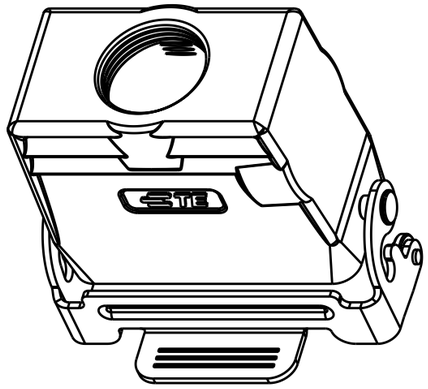

SCALE 4:5

NOTES:
1. TECHNICAL CHARACTERISTICS:
   BODY MATERIAL: DIE CAST ALUMINIUM ALLOY
   SURFACE TREATMENT: POWDER-COATED, GRAY
   DEGREE OF PROTECTION: IP65 (MATED)

注释：
1. 技术参数：
   主体材料： 铝合金
   表面处理： 粉末喷涂， 灰色
   防护等级： IP65(配合)

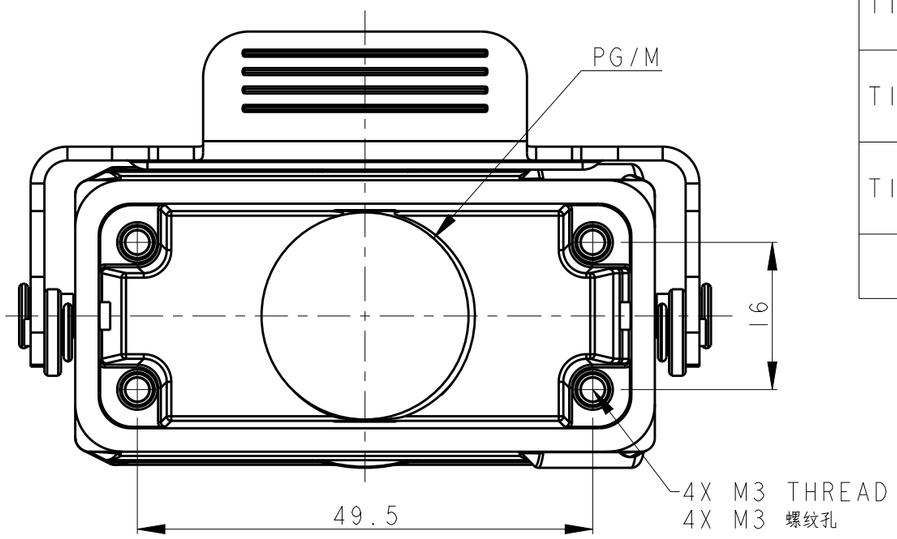

PART NUMBER 料 号	PART DESCRIPTION 描 述		PG/M THREAD PG/M 螺纹
T1739101116-000	H10A-TBFS-PG16	H10A HOUSING,CABLE-TO-CABLE,STAINLESS STEEL SINGLE LOCKING,PG16,POWDER COATED,GREY H10A下壳，电缆对接，不锈钢单扣，PG16，灰色粉末喷涂	PG16
T1739101120-000	H10A-TBFS-M20	H10A HOUSING,CABLE-TO-CABLE,STAINLESS STEEL SINGLE LOCKING,M20,POWDER COATED,GREY H10A下壳，电缆对接，不锈钢单扣，M20，灰色粉末喷涂	M20
T1739101125-000	H10A-TBFS-M25	H10A HOUSING,CABLE-TO-CABLE,STAINLESS STEEL SINGLE LOCKING,M25,POWDER COATED,GREY H10A下壳，电缆对接，不锈钢单扣，M25，灰色粉末喷涂	M25

THIS DRAWING IS A CONTROLLED DOCUMENT.

DIMENSIONS: mm

TOLERANCES UNLESS OTHERWISE SPECIFIED:
0 PLC ±-
1 PLC ±-
2 PLC ±-
3 PLC ±-
4 PLC ±-
ANGLES ±-

MATERIAL - -
FINISH - -

DWN DAVID LI 29APR2015
CHK CHRIS WANG 29APR2015
APVD XU XIANG 29APR2015
PRODUCT SPEC 108-137010
APPLICATION SPEC 114-137010
WEIGHT -

TE Connectivity

NAME H10A-TBFS-PG/M

SIZE	CAGE CODE	DRAWING NO	RESTRICTED TO
A3	-	C-T1739101XX000	-

CUSTOMER DRAWING

SCALE 3:2 SHEET 1 OF 1 REV A1