**MICRO SWITCH**
a Honeywell Division
FED. MFG. CODE 91929

# SWITCH-ENCLOSED

CATALOG LISTING
**8LS10**

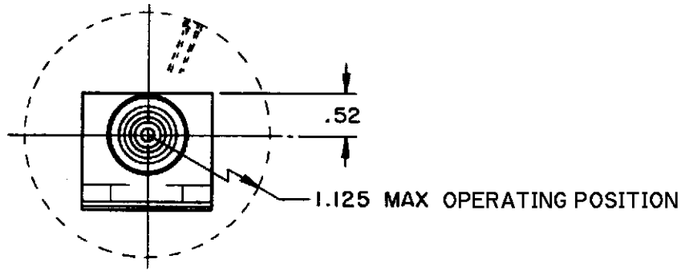


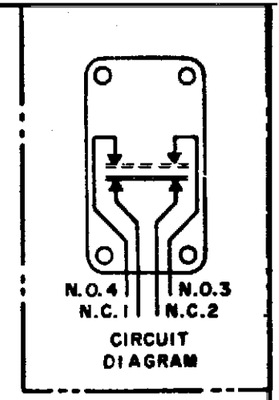


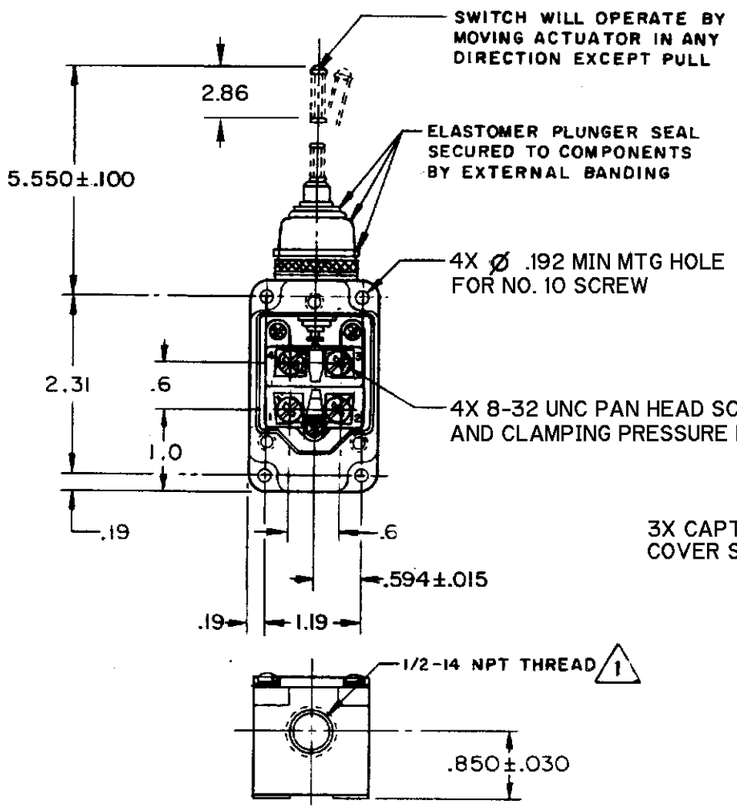


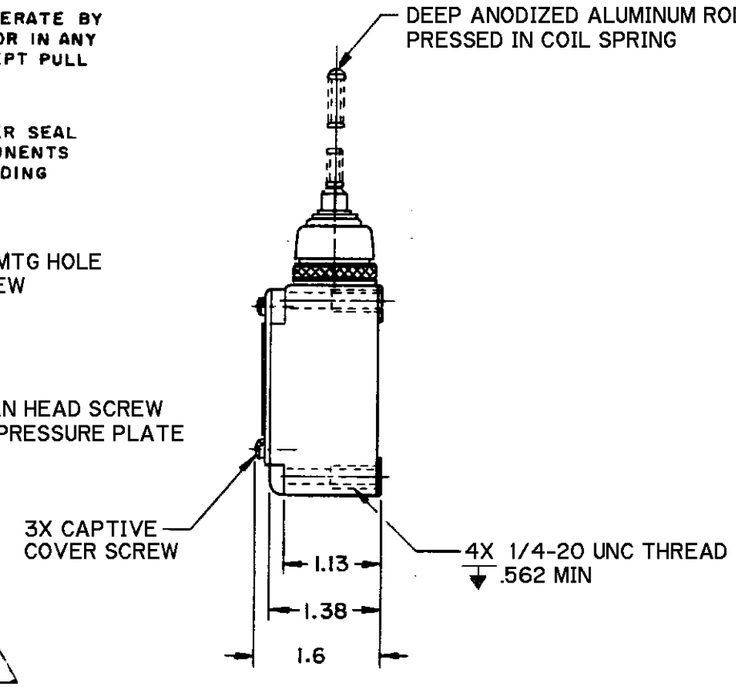


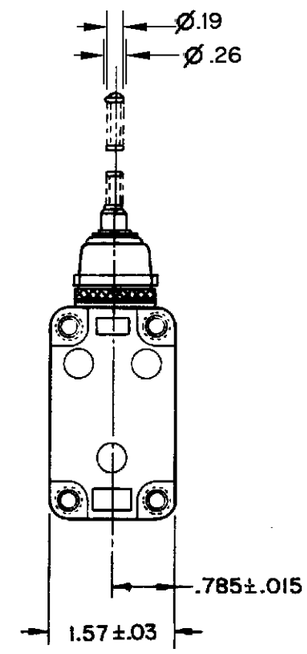


NOTE
1 SEAL TO BE PROVIDED BY USER

THIS DRAWING COVERS A PROPRIETARY ITEM AND IS THE PROPERTY OF MICRO SWITCH. A DIVISION OF HONEYWELL. THIS DRAWING IS NOT TO BE COPIED OR USED WITHOUT THE APPROVAL OF MICRO SWITCH

THIRD ANGLE PROJECTION

SCALE 1/2 : 1

DO NOT SCALE PRINT

| CHARACTERISTICS | |
|---|---|
| OPERATING POSITION | 1.125 MAX IN ANY DIRECTION |
| OPERATING FORCE | 5 OZ MAX |
| FORCE AT 2.0 | 10 OZ MAX |
| SWITCH-BASIC REPLACEMENT | 2MN1 |

**ELECTRICAL DATA**

CONTACT ARRANGEMENT
(SEE CIRCUIT DIAGRAM)

10A-120, 240 OR 480 VAC
1/3 HP-120 VAC; 3/4 HP-240 VAC
0.8A-115 VDC; 0.4A-230 VDC; 0.1A-550VDC
PILOT DUTY 600 VAC MAX

UNLESS OTHERWISE SPECIFIED TOLERANCES ARE

| | | |
|---|---|---|
| ONE PLACE | (.0) | ±.030 |
| TWO PLACE | (.00) | ±.015 |
| THREE PLACE | (.000) | ±.005 |
| ANGLES | | ± |

WEIGHT

CATALOG LISTING 8LS10
PAGE 1 OF 1
ISSUE 1
REPLACES
RELEASE NO. PR-23887
CHECK
REVISIONS
CHECK 19 MAR 99 J A F
CHECK
DRAWN 19 MAR 99 J A F
FORMTEK