THIS DRAWING IS UNPUBLISHED. RELEASED FOR PUBLICATION -,- .
© COPYRIGHT - BY TYCO ELECTRONICS CORPORATION. ALL INTERNATIONAL RIGHTS RESERVED.

LOC	DIST
AJ	16

REVISIONS

P	LTR	DESCRIPTION	DATE	DWN	APVD
	H	REVISED PER ECO-10-008441	17JUN10	HMR	KW

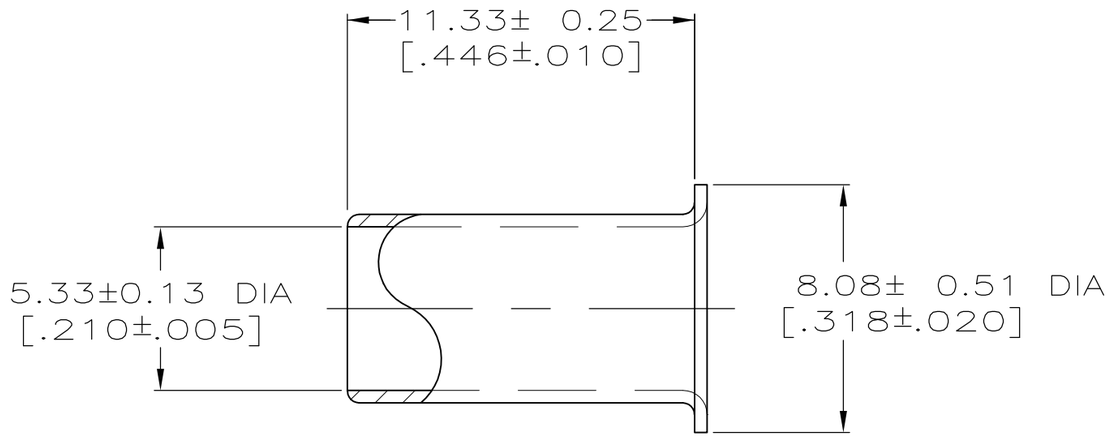

VIEW X

1. COPPER ALLOY
2. NICKEL PL PER QQ-N-290
3. TIN PL PER MIL-T-10727
4. BLACK CHROMATE PLATE OVER ZINC PLATE PER ASTM-B-633
5. BLACK NICKEL PLATE

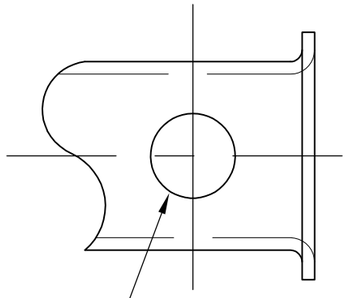

2.77 DIA, 2 HOLES
[.109]
180°±10° APART

VIEW Y
SAME AS VIEW X EXCEPT

VIEW	FINISH	PART NUMBER
X	4	226599-7
X	5	226599-6
Y	3	226599-4
X	2	226599-2

THIS DRAWING IS A CONTROLLED DOCUMENT.

DIMENSIONS: mm [INCHES]

TOLERANCES UNLESS OTHERWISE SPECIFIED:
0 PLC ± -
1 PLC ± -
2 PLC ± -
3 PLC ± -
4 PLC ± -
ANGLES ± -

MATERIAL 1

FINISH SEE TABLE

DWN J. MOLL 21NOV90
CHK M. SNEED 21NOV90
APVD R. HENRY 21NOV90
PRODUCT SPEC —
APPLICATION SPEC —
WEIGHT —

CUSTOMER DRAWING

Tyco Electronics
Tyco Electronics Corporation
Harrisburg, PA 17105-3608

NAME FERRULE, MINIATURE UHF

SIZE	CAGE CODE	DRAWING NO	RESTRICTED TO
A3	00779	C-226599	—

SCALE 5:1 SHEET 1 OF 1 REV H

1470-19 (1/08)