THIS DRAWING IS UNPUBLISHED. RELEASED FOR PUBLICATION -,- .
© COPYRIGHT - BY TYCO ELECTRONICS CORPORATION. ALL RIGHTS RESERVED.

LOC	DIST
AD	00

REVISIONS

P	LTR	DESCRIPTION	DATE	DWN	APVD
	C	EC 0G3C 0005 05	05FEB05	BSV	JRO
	C1	REVISED PER ECO-09-020689	27AUG09	KK	AEG

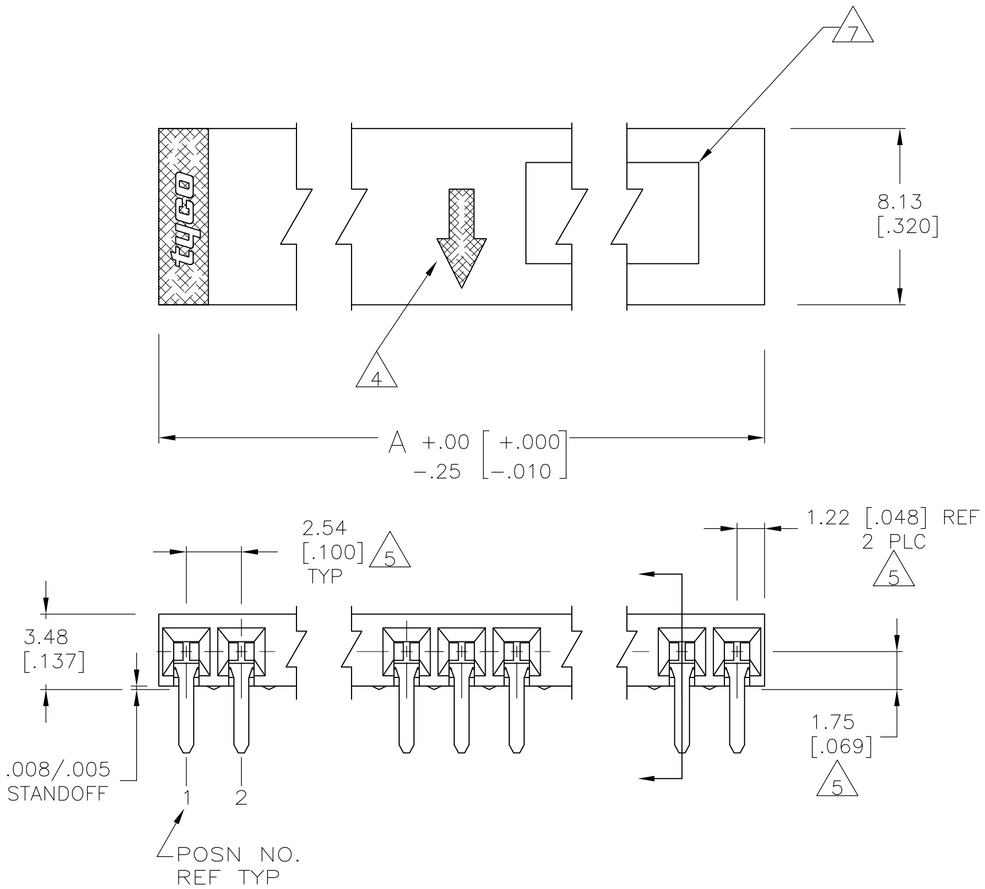

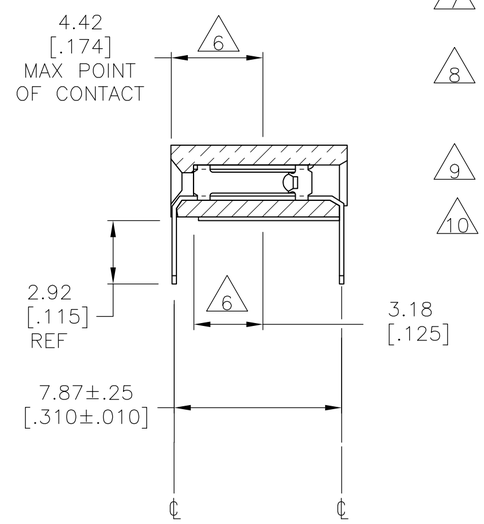

1. HOUSING MATERIAL : GLASS FILLED, FLAME RETARDANT POLYSTER, COLOR-BLACK.
2. CONTACT MATERIAL: PHOSPHOR BRONZE.
3. CONTACT FINISH : DUPLEX PLATED 0.00076 [.000030] GOLD ON CONTACT AREA, .00381-.00762 [.000150-.000300] BRIGHT TIN-LEAD ON SOLDER TINES, ALL OVER 0.00127 [.000050] MIN. NICKEL.
4. MOLDED IN ARROW DESIGNATES THE MATING FACE OF THE CONNECTOR.
5. DIMENSIONS PERTAIN TO CAVITY CENTERLINES.
6. POINT OF MEASUREMENT FOR PLATING THICKNESS OF CONTACT AREA.
7. DATE CODE AND PART NUMBER MARKED IN APPROXIMATE LOCATION SHOWN.
8. CONTACT FINISH : DUPLEX PLATED 0.00076 [.000030] GOLD ON CONTACT AREA, .00381-.00762 [.000150-.000300] MATTE TIN ON SOLDER LEADS, ALL OVER 1.27 [.000050] MIN. NICKEL.
9. ROHS 2002 /95/EC COMPLIANT
10. OBSOLETE PARTS: OBSOLETE CIS STREAMLINING PER D.RENAUD/D.SINISI

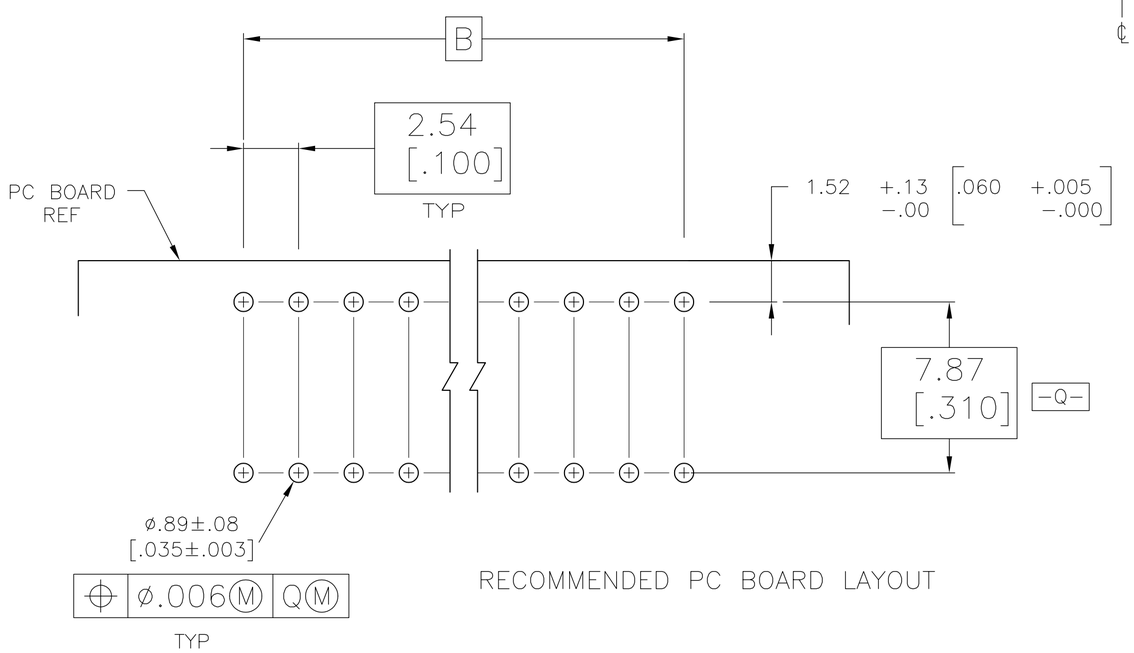

RECOMMENDED PC BOARD LAYOUT

10	8	2, 6, 7, 9 THRU 14	35.56 [1.400]	38.10 [1.500]	15	9 ~~5-146769-2~~
	8	2 THRU 7, 9 THRU 14	35.56 [1.400]	38.10 [1.500]	15	9 5-146769-1
10	3	2, 6, 7, 9 THRU 14	35.56 [1.400]	38.10 [1.500]	15	~~146769-2~~
	3	2 THRU 7, 9 THRU 14	35.56 [1.400]	38.10 [1.500]	15	146769-1
FINISH		POSN NUMBERS OMITTED	B	A	NO OF POSN	PART NUMBER

THIS DRAWING IS A CONTROLLED DOCUMENT.

DIMENSIONS: mm [INCHES]

TOLERANCES UNLESS OTHERWISE SPECIFIED:
0 PLC ± -
1 PLC ± -
2 PLC ± -
3 PLC ± -
4 PLC ± -
ANGLES ± -

MATERIAL 1 2
FINISH 3 8

DWN E. BRANDBERG 30-AUG-96
CHK B. STAUCH 30-AUG-96
APVD B. STAUCH 30-AUG-96
PRODUCT SPEC —
APPLICATION SPEC —
WEIGHT —

tyco Electronics
Tyco Electronics Corporation
Harrisburg, Pa 17105-3608

NAME
AMPMODU MOD II, RECPT ASSY, HORIZONTAL, 2.54[.100] CL, 1 ROW, CLOSED ENTRY, SPOC, 0.00076 [.000030] GOLD DUPLEX, END STACK

SIZE	CAGE CODE	DRAWING NO	RESTRICTED TO
A2	00779	C-146769	—

CUSTOMER DRAWING
SCALE 5:1 SHEET 1 OF 1 REV C1

146769

AMP 1471-9 REV 31MAR2000

H:\dmtmod\ECs\e000505cIndia\146769-c.dwg