THIS DRAWING IS UNPUBLISHED. RELEASED FOR PUBLICATION -,- .
© COPYRIGHT - Tyco Electronics Japan G.K. ALL RIGHTS RESERVED.

LOC	DIST
J	—

REVISIONS 変更

P	LTR	DESCRIPTION	DATE	DWN	APVD
	A	REVISED ECR-15-008944	17JUN15	KF	RK

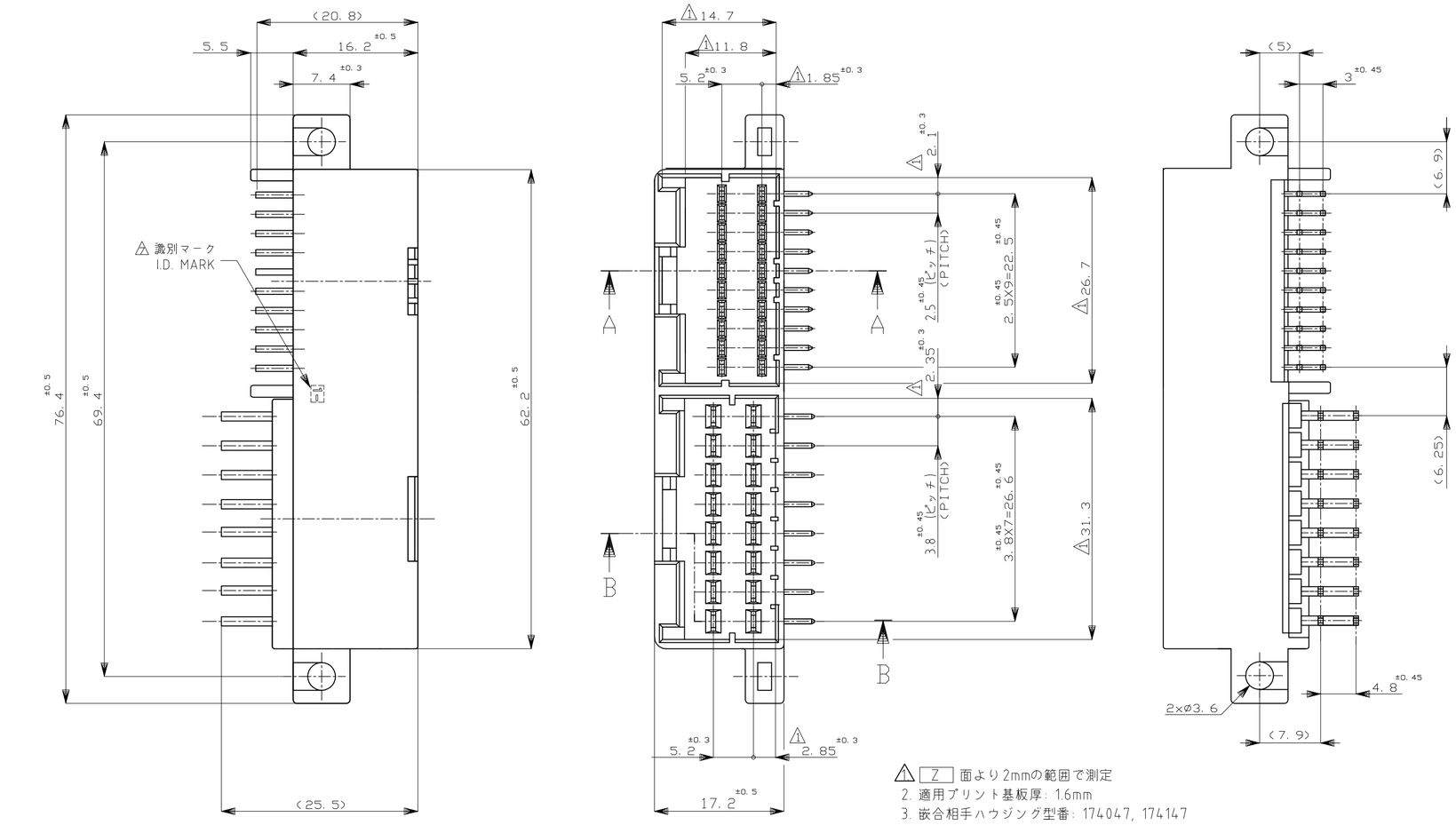

1. Z 面より2mmの範囲で測定
2. 適用プリント基板厚: 1.6mm
3. 嵌合相手ハウジング型番: 174047, 174147
4. 推奨取付けねじ: JIS B1115, B1122 タッピンねじ、なべ2種
   呼び径4、長さ7mm以上(締付けトルク:58.8N-cm (6Kg-cm)以下)
5. コンタクトの仕上げ:錫めっき済、又は接触部分金めっき
   (金めっきコンタクトの位置は表参照)
6. 回路番号

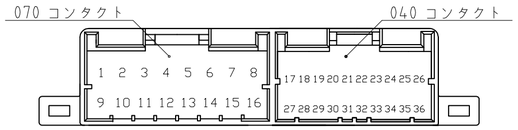

7. 適用製品型番の識別マーク(I.D. MARK)を
   ホットマークにて表示

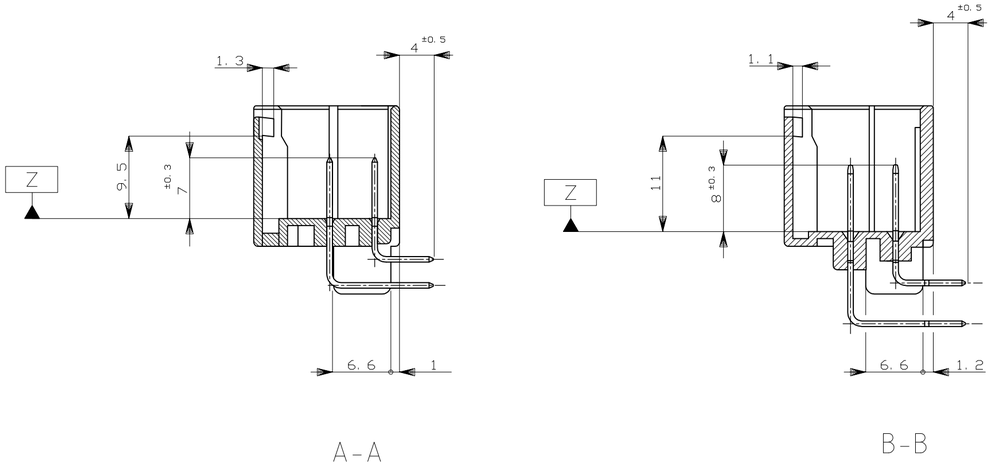

プリント基板取付け寸法 (公差:±0.1)
(MOUNTING DIMENSIONS FOR P.C. BOARD: TOLERANCE ±0.1)
※ピッチ公差は累積しないこと (NON ACCUMULATE PITCH TOLERANCE)

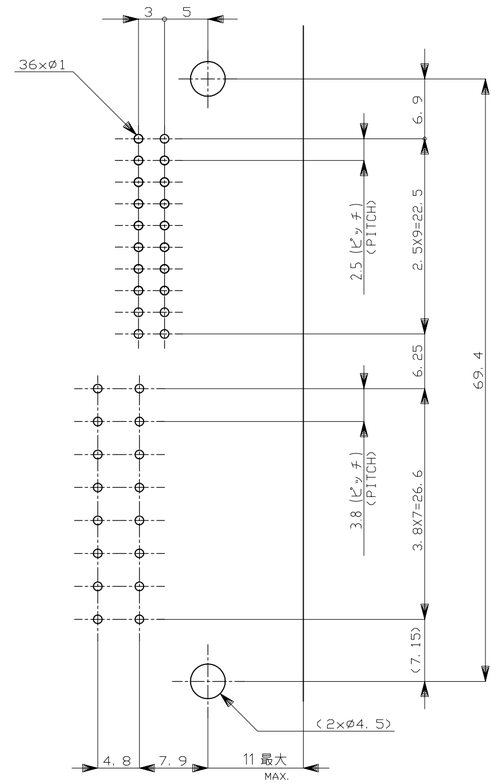

1. TO BE MEASURED WITHIN 2mm FROM Z
2. APPLICABLE P.C. BOARD THICKNESS; 1.6mm
3. THE MATING PLUG HOUSING PART NUMBER; 174047, 174147
4. RECOMMENDED MOUNTING SCREW; 4mmDIA, 7mmLENGTH(MIN.)
   PAN HEAD, CLASS 2 TAPPING SCREW SPECIFIED IN JIS B1115,
   B1122 (TIGHTENING TORQUE; 58.8N-cm (6Kg-cm) MAX.)
5. FINISH OF CONTACT; PRE-TINNED OR SELECTIVE GOLD PLATING
   (FOR THE CIRCUIT NUMBER OF GOLD PLATING CONTACT, SEE THE TABLE)
6. CIRCUIT NUMBER
7. I.D. MARK OF PRODUCT PART NUMBER BY HOT MARK

52-	PRE-TIN X 26		17~21,24,27~29,31	BLACK 黒色	2-5178460-2
	SELECTIVE-TIN (MATTE)	SELECTIVE GOLD X 10			
2-	PRE-TIN X 26		17~21,24,27~29,31	BLACK 黒色	2-178460-2
	TIN-LEAD	SELECTIVE GOLD X 10			
-	PRE-TIN X 36		-	BLACK 黒色	178460-1
MARKING マーキング 7	SOLDERING SIDE 半田付け部	CONTACT SIDE 接触部側	GOLD PLATED CIRCUIT NO. 6 金めっき回路番号	COLOR 色	PART NUMBER 製品型番
	CONTACT FINISH コンタクト仕上				

THIS DRAWING IS A CONTROLLED DOCUMENT.

DIMENSIONS: 単位: 耗 mm

TOLERANCES UNLESS OTHERWISE SPECIFIED: 一般公差
0 PLC ± -
1 PLC ± -
2 PLC ± -
3 PLC ± -
4 PLC ± -
ANGLES ± -

TOLERANCES UNLESS OTHERWISE SPECIFIED: 一般公差
10 : ±0.2
30 > 10 : ±0.25
100 > 30 : ±0.3
ANGLE : ±3°

MATERIAL 材料: HOUSING: PBT CONTACT: BRASS

FINISH 仕上: SEE NOTE 5

DWN	M.SUGAWARA	13JUL06
CHK	K.BETSUI	13JUL06
APVD	K.BETSUI	13JUL06
PRODUCT SPEC 製品規格	108-5244	
APPLICATION SPEC 取付適用規格	—	
WEIGHT	13.7g	

TE Connectivity

NAME 名称: 36POSITION CAP HOUSING ASSEMBLY (HORIZONTAL TYPE) 040/070 COMBI. TYPE MULTI-LOCK I/O CONNECTOR

SIZE	CAGE CODE	DRAWING NO 番号	RESTRICTED TO
A2	00779	C-178460	—

CUSTOMER DRAWING | SCALE 尺度 2:1 | SHEET 1 OF 1 | REV A

178460

1471-9 (3/11)