| REVISIONS | | | | |
|---|---|---|---|---|
| REV. SYM. | E.C.O. NUMBER | DESCRIPTION | BY DATE | APP'D DATE |
| 1 | | ORIGINAL RELEASE | LME 5/20/96 | DJR 6/4/96 |

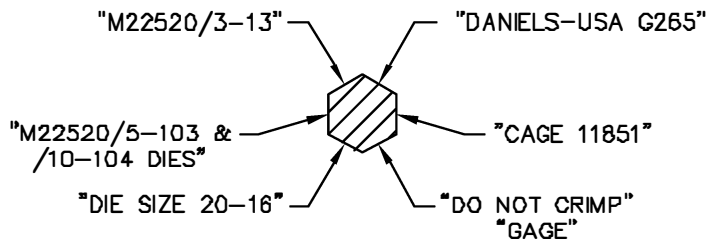


SECTION A-A

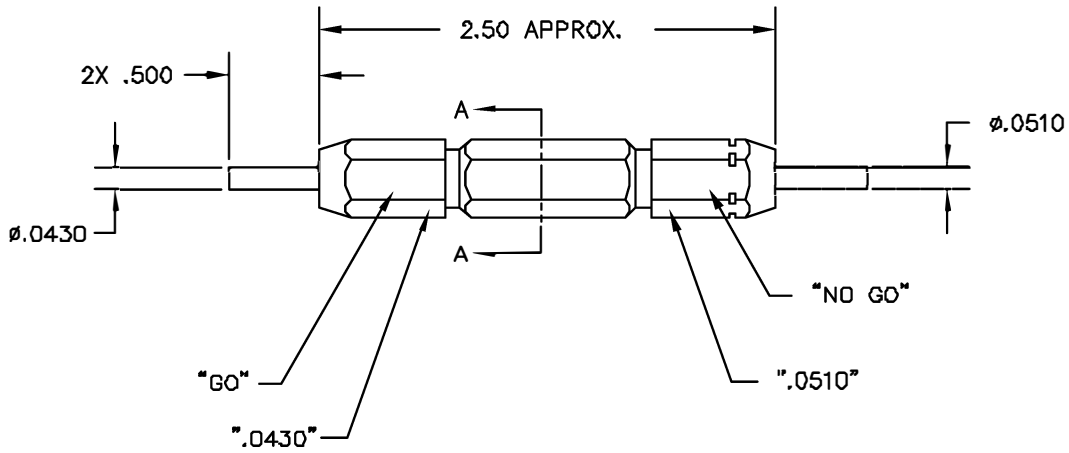


**UNCONTROLLED DOCUMENT WILL NOT BE UPDATED**

RESTRICTED & CONFIDENTIAL

CONFIDENTIAL PROPERTY OF DANIELS MANUFACTURING CORP. NOT TO BE DISCLOSED TO OTHERS, REPRODUCED OR USED FOR ANY OTHER PURPOSE, EXCEPT AS AUTHORIZED IN WRITING BY DANIELS MANUFACTURING. MUST BE RETURNED TO DANIELS MANUFACTURING CORP. ON COMPLETION OF ORDER OR OTHER PURPOSE FOR WHICH LENT.

DO NOT SCALE DRAWING

MATERIAL

HEAT TREAT

FINISH

| ITEM | PART NO. | QTY. | DESCRIPTION/REMARKS |
|---|---|---|---|

| | | |
|---|---|---|
| DRN. | LME | DATE 5/30/96 |
| CHK'D. | MCS | DATE 3/2/96 |
| APP'D. | DJR | DATE 3/4/96 |
| APP'D. | | DATE |

DMC DANIELS MANUFACTURING CORP. ORLANDO, FLORIDA CAGE 11851

TITLE: GO/NO-GO GAGE ENVELOPE DRAWING (M22520/3-13)

WHERE USED:

| SIZE | SCALE | CAD P/N | SHEET 1 OF 1 |
|---|---|---|---|
| B | NTS | G265-ENV | |

POSTING | P/N G265-ENV | REV. 1