Alle Rechte vorbehalten/ *All rights reserved*

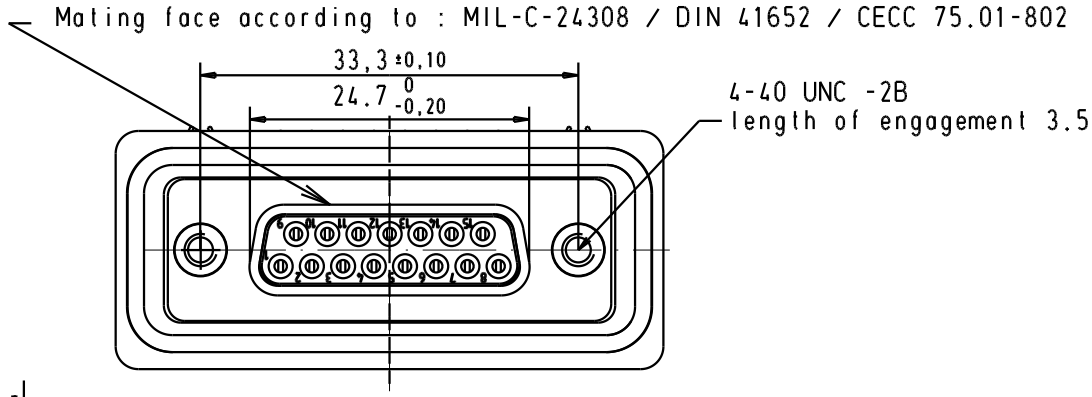

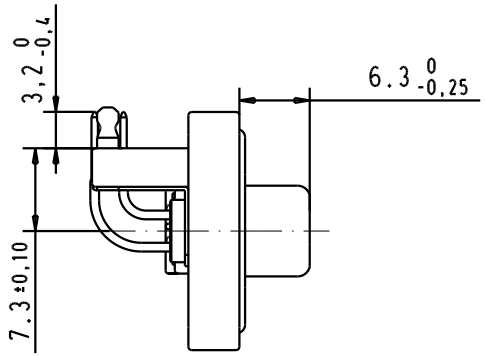

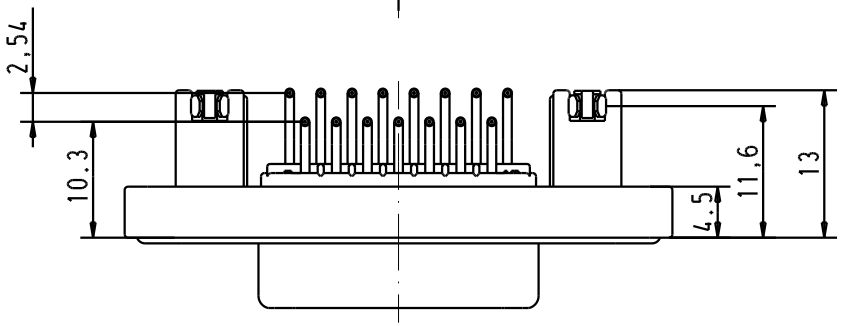

1) Protection standard IP 67 according to IEC 529 / DIN 40050.

PCB layout hole
component side
(PCB holes plating : Tin)

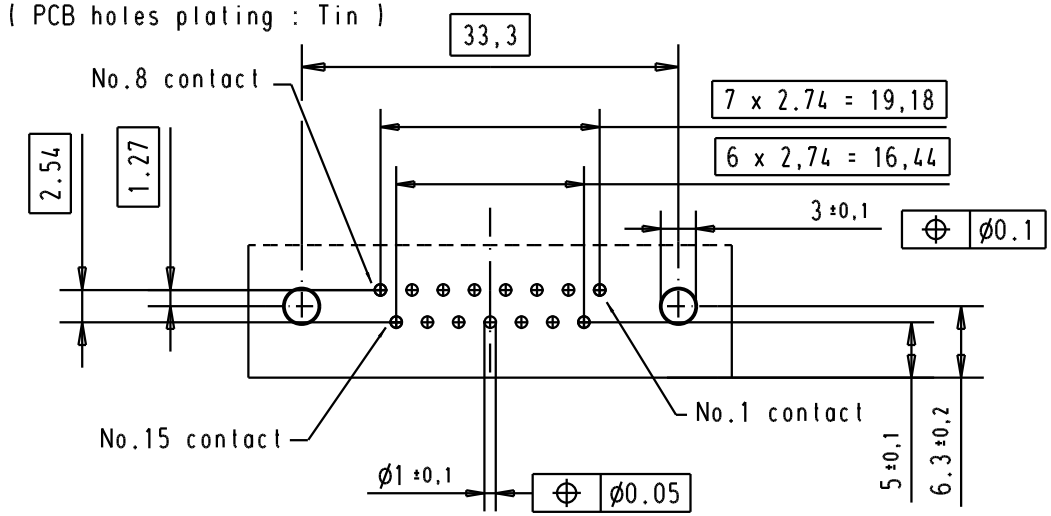

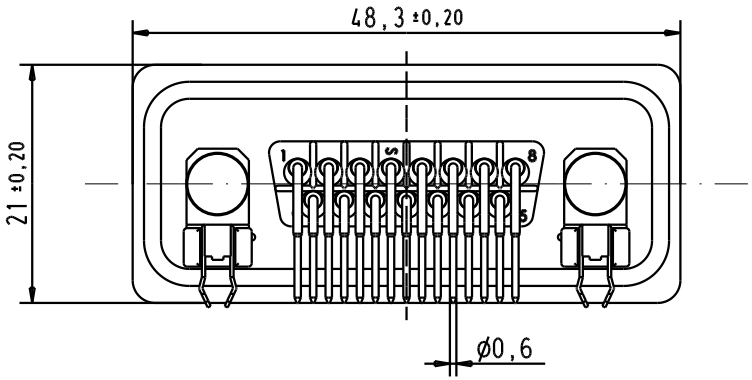

09 67 515 6758	Au plating 0,76 µm mini
Part Number	Performance Level

31587	20/01/04	S.H
Mod.	Dat.	Name

	Dat.	Name
Detail.	20/01/04	S.H.
Insp.		
Stand.		

All Dim. in mm
Orig. Size DIN A 4

D-SUB IP67 female 15 Poles angled solder pin with bracket and clip for 1.6mm PCB 4-40 UNC nut

Maßstab/ *Scale*

HARTING ELEKTRONIK
F-95972 Paris

TB 09 67 515 6758

Sub.

Blatt/ *Page*