Alle Rechte vorbehalten/ *All rights reserved*

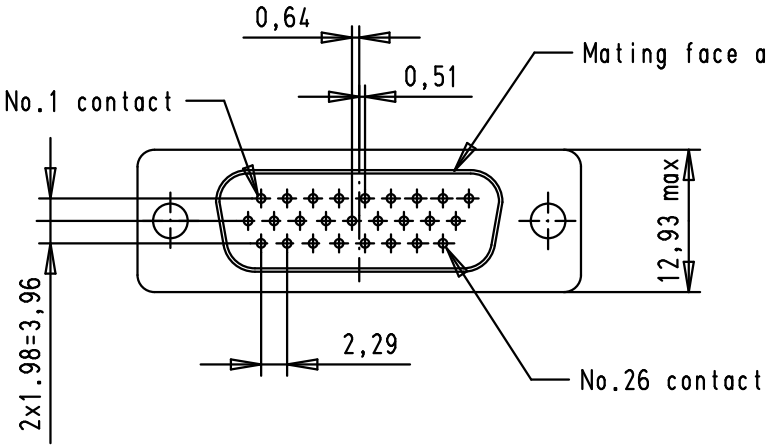

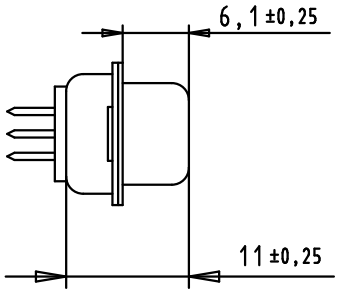

Printed layout component side

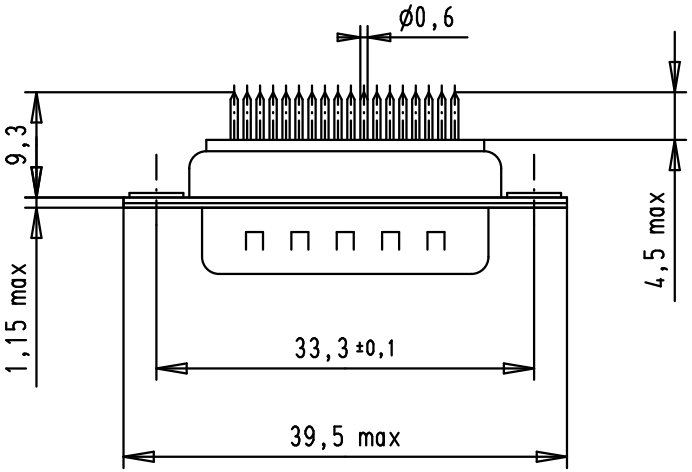

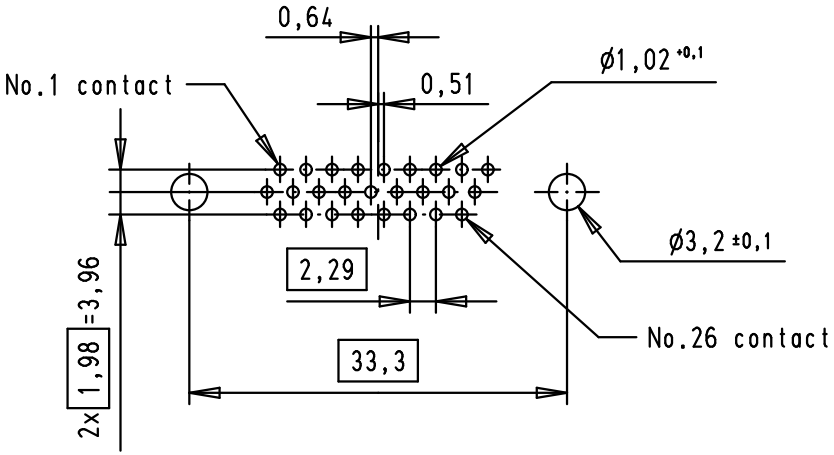

							Dat.	Name		Dsub, 26 poles, male, straight solder pins, through holes shell with dimples	Maßstab/ *Scale*
						Detail.	16-SEP-02	CV	All Dim. in mm Orig. Size DIN A 4		1.5:1
						Insp.					
			36182	13-OCT-10	BH	Stand.					
09562615700	0.76 µm Au		31352	16-OCT-02	*S.H.*	HARTING EURL F-95972 Paris				TB 0956261x700	Blatt/ *Page* 1
09562617700	3		31064	16-SEP-02	CV						
Part number	Performance level		Mod.	Dat.	Name					Sub.	