THIS DRAWING IS UNPUBLISHED. RELEASED FOR PUBLICATION -,- .
© COPYRIGHT 2002 By - ALL RIGHTS RESERVED.

LOC	DIST
E	B

REVISIONS

P	LTR	DESCRIPTION	DATE	DWN	APVD
	A	RELEASE FOR PRODUCTION	08-05-02	AJB	PB
	B	EBD0-0271-03	21-8-03	PB	JA
	B1	ECR-10-022205	01FEB11	KK	HMR

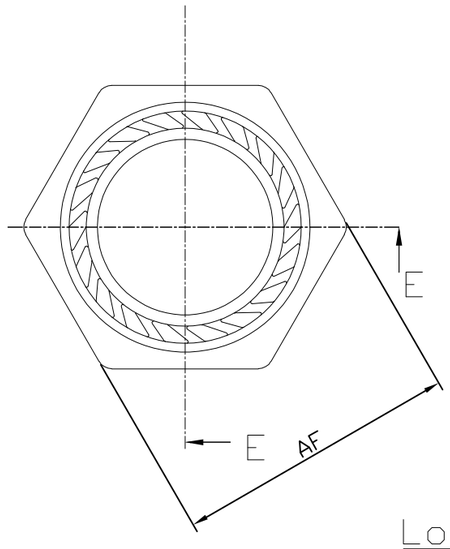

Gland and Cap Assembly.

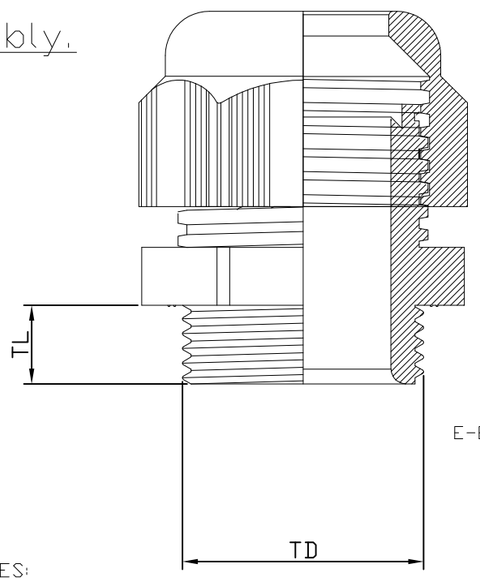

E-E SECTION

Lock Nut. (Supplied as Part of Kit

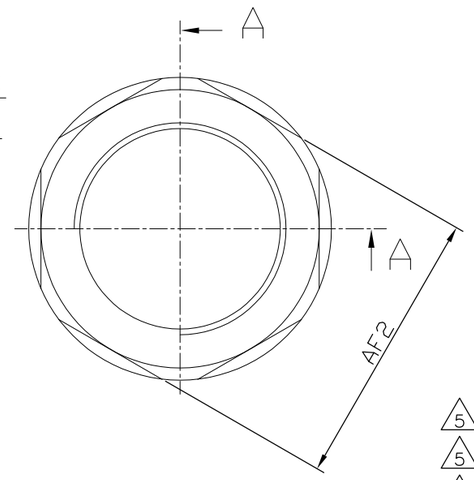

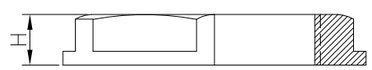

A-A

	Part No	Packing Label Description Line 1	Packing Label Description Line 2	Packing Label Description Line 3	Packing Label Description Line 4
	1478768-1	Anti-Vibration Nylon Locking Gland	12mm Gland & lock Nut GREY	IP68 * Zero Halogen * VDE	Cable Range (mm) 3.0-6.5
	1478768-2	Anti-Vibration Nylon Locking Gland	16mm Gland & lock Nut GREY	IP68 * Zero Halogen * VDE	Cable Range (mm) 5.0-10.0
	1478768-3	Anti-Vibration Nylon Locking Gland	20mm Gland & lock Nut GREY	IP68 * Zero Halogen * VDE	Cable Range (mm) 6.0-12.0
	1478768-4	Anti-Vibration Nylon Locking Gland	20mm Gland & lock Nut GREY	IP68 * Zero Halogen * VDE	Cable Range (mm) 10.0-14.0
	1478768-5	Anti-Vibration Nylon Locking Gland	25mm Gland & lock Nut GREY	IP68 * Zero Halogen * VDE	Cable Range (mm) 13.0-18.0
5	1478768-6	Anti-Vibration Nylon Locking Gland	32mm Gland & lock Nut GREY	IP68 * Zero Halogen * VDE	Cable Range (mm) 18.0-25.0
5	1478768-7	Anti-Vibration Nylon Locking Gland	40mm Gland & lock Nut GREY	IP68 * Zero Halogen * VDE	Cable Range (mm) 22.0-32.0
5	1478768-8	Anti-Vibration Nylon Locking Gland	50mm Gland & lock Nut GREY	IP68 * Zero Halogen * VDE	Cable Range (mm) 30.0-38.0
5	1478768-9	Anti-Vibration Nylon Locking Gland	63mm Gland & lock Nut GREY	IP68 * Zero Halogen * VDE	Cable Range (mm) 34.0-44.0

Part No	Gland & Cap Assembly			Locknut	
	Dim TL	Dim TD	Dim AF	Dim H	Dim AF2
1478768-1	8	12	15	5	18
1478768-2	10	16	22	5	22
1478768-3	10	20	24	6	26
1478768-4	10	20	27	6	26
1478768-5	10	25	33	6	32
5 ~~1478768-6~~	18	32	42	7	41
5 ~~1478768-7~~	18	40	53	7	50
5 ~~1478768-8~~	18	50	60	8	60
5 ~~1478768-9~~	18	63	65	8	75

Inner Carton Qty.	Bag Qty.	Cable Range (mm)	Lock Nut Part No.	Description.	Colour.	Kit Part No.
5 10	2	34.0 - 44.0	1478675-8	63mm Gland + Locknut	Grey	~~1478768-9~~
5 10	2	30.0 - 38.0	1478675-7	50mm Gland + Locknut	Grey	~~1478768-8~~
5 10	2	22.0 - 32.0	1478675-6	40mm Gland + Locknut	Grey	~~1478768-7~~
5 30	5	18.0 - 25.0	1478675-5	32mm Gland + Locknut	Grey	~~1478768-6~~
50	5	13.0 - 18.0	1478675-4	25mm Gland + Locknut	Grey	1478768-5
100	5	10.0 - 14.0	1478675-3	20mm Gland + Locknut	Grey	1478768-4
100	5	6.0 - 12.0	1478675-3	20mm Gland + Locknut	Grey	1478768-3
100	5	5.0 - 10.0	1478675-2	16mm Gland + Locknut	Grey	1478768-2
100	5	3.0 - 6.5	1478675-1	12mm Gland + Locknut	Grey	1478768-1

NOTES:

1 FOR TECHNICAL DATA REFER TO YOUR LOCAL TYCO ELECTRONICS SALES OFFICE.

2 ALL DIMENSIONS ARE NOMINAL FOR REFERENCE ONLY UNLESS OTHERWISE STATED.

3 FOR PACKAGING INFORMATION SEE PACKING SPECIFICATION 107-3293 TABLE ABOVE SHOWS PACKING LABEL DETAILS.

4 1 KIT COMPRISES OF 1 OFF GLAND & CAP (AS SHOWN) INCLUDING NEOPRENE SEAL PLUS 1 LOCK NUT (AS SHOWN SEPARATELY)

5 OBSOLETE

THIS DRAWING IS A CONTROLLED DOCUMENT.

DIMENSIONS: mm

TOLERANCES UNLESS OTHERWISE SPECIFIED:
0 PLC ± -
1 PLC ± -
2 PLC ± -
3 PLC ± -
4 PLC ± -
ANGLES ± -

MATERIAL -

FINISH -

DWN A.J.Beken 30-04-02
CHK P.Bates 08-05-02
APVD P.Bates 08-05-02
PRODUCT SPEC —
APPLICATION SPEC —
WEIGHT —

TE Connectivity

NAME
METRIC ANTI-VIBRATION GLAND & LOCK NUT KIT
NYLON - GREY
12 - 63 mm RANGE

SIZE	CAGE CODE	DRAWING NO	RESTRICTED TO
A3	00779	C-1478768	—

CUSTOMER DRAWING | SCALE N.T.S | SHEET 1 OF 1 | REV B1