THIS DRAWING IS UNPUBLISHED. RELEASED FOR PUBLICATION – , – .
© COPYRIGHT – By – ALL RIGHTS RESERVED.

LOC	DIST
—	—

REVISIONS

P	LTR	DESCRIPTION	DATE	DWN	APVD
	B	ECO–14–006873	08MAY14	KG	DK

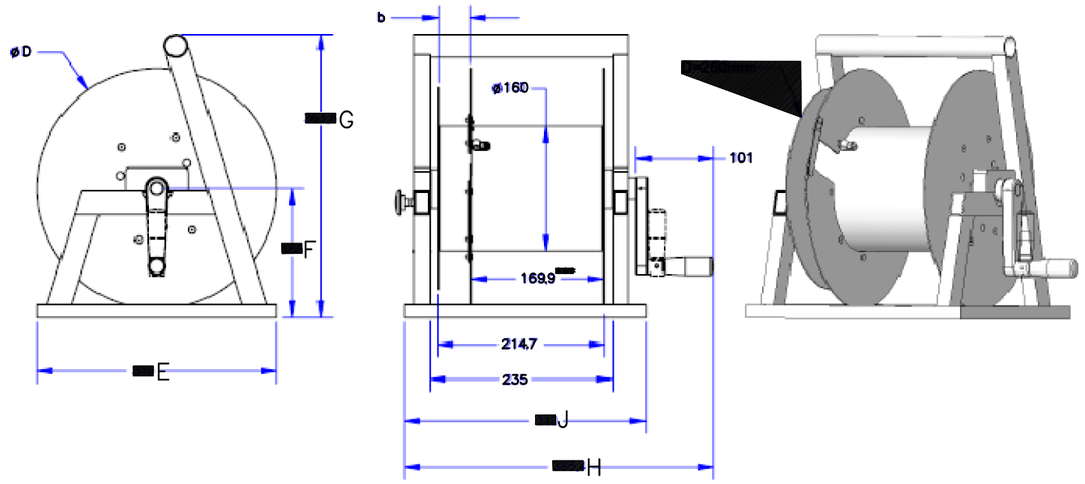

BLACK	675	525	700	560	290	393.5	545.7	262.5	353.4	460	40	1–1918930–4
BLACK	–	–	–	–	290	393.5	545.7	–	353.4	378	40	1–1918930–3
BLACK	932	699	1125	844	290	393.5	570.5	267.7	359.4	518	40	1–1918930–2
BLACK	228	171	281	211	290	393.4	363.6	165	310	310	40	1–1918930–1
GREEN RAL 6006	675	525	700	560	290	393.5	545.7	262.5	353.4	460	40	1918930–3
GREEN	932	699	1125	844	352.5	415.5	567.2	267.7	380	520	40	1918930–2
GREEN RAL 6006	228	171	281	211	290	393.4	363.6	165	310	310	40	1918930–1
FINISH COLOR	STRAIGHT LAY	RANDOM LAY	STRAIGHT LAY	RANDOM LAY	J (mm)	H (mm)	G (mm)	F (mm)	E (mm)	ØD (mm)	b (mm)	PART NUMBER
	ø5.5mm CABLE CAPACITY (M)		ø5.0mm CABLE CAPACITY (M)									

1. DIMENSIONS ARE FOR REFERENCE ONLY.
2. MATERIAL: ALUMINUM 6061–T6.
3. FINISH: POLYESTER EPOXY, COLOR (SEE TABLE).

THIS DRAWING IS A CONTROLLED DOCUMENT.

DIMENSIONS: mm

TOLERANCES UNLESS OTHERWISE SPECIFIED:
0 PLC ± –
1 PLC ± –
2 PLC ± –
3 PLC ± –
4 PLC ± –
ANGLES ± –

MATERIAL – 2
FINISH – 3

DWN K. GLATFELTER 24OCT2006
CHK J. SHIPE 17NOV2006
APVD D. BAECHTLE 17NOV2006
PRODUCT SPEC —
APPLICATION SPEC —
WEIGHT —

TE Connectivity

NAME: CABLE REEL ASSEMBLY w/STAND –

SIZE	CAGE CODE	DRAWING NO	RESTRICTED TO
A3	00779	C–1918930	—

CUSTOMER DRAWING

SCALE NTS | SHEET 1 OF 1 | REV B

1470–19 (3/11)