ON Semiconductor
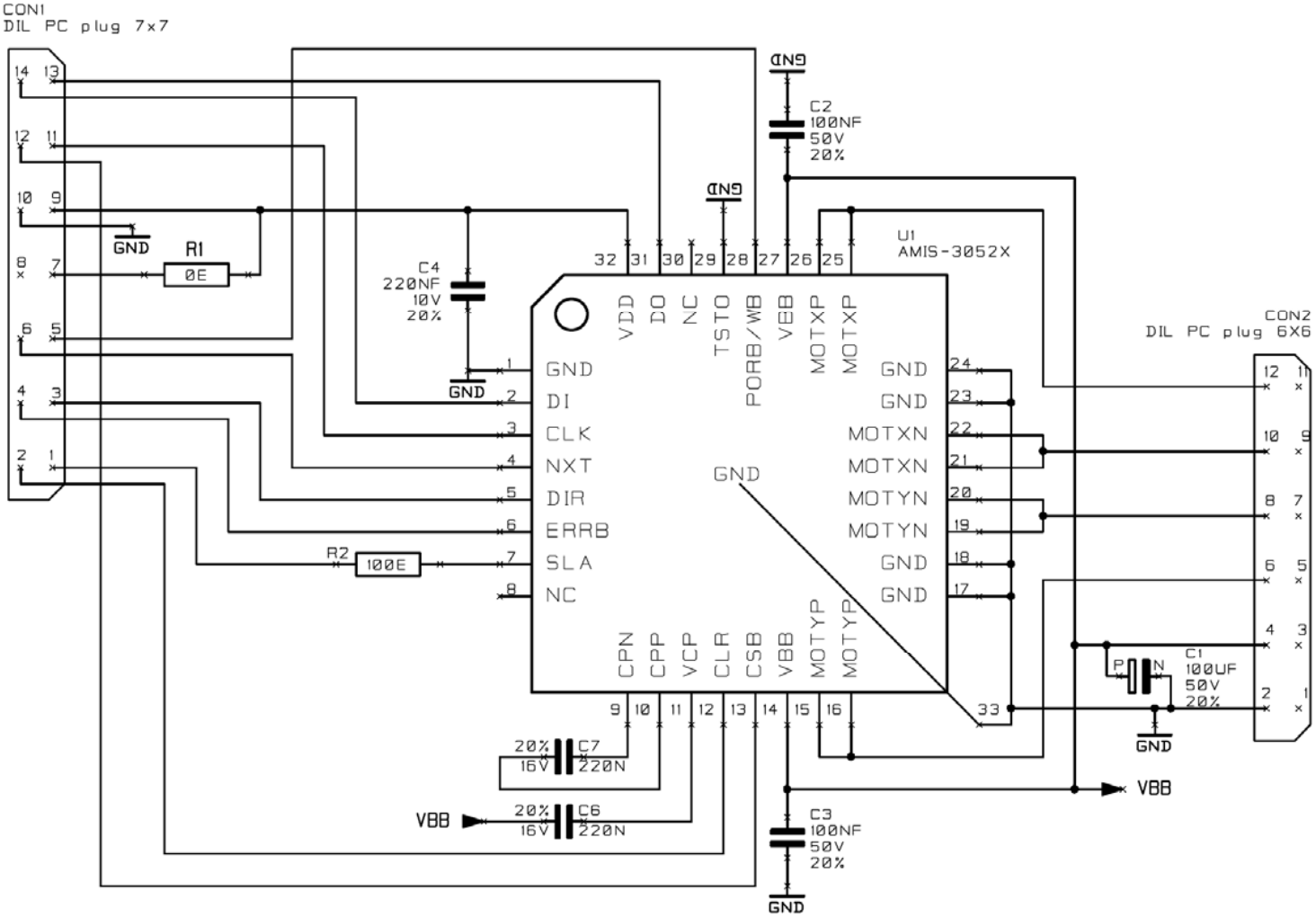
Schematic for the AM305222R1DBGEVB