| REV. | DATE | DESCRIPTION |
|---|---|---|
| NC | 08/29/02 | INITIAL RELEASE |

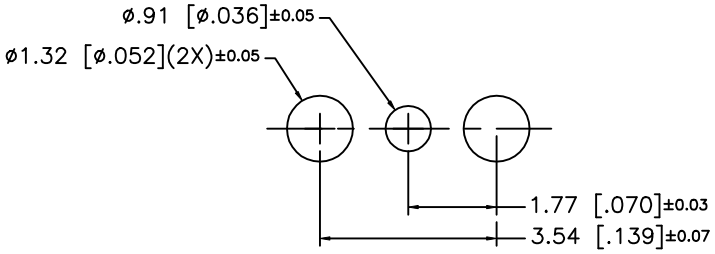


PCB MOUNTING HOLE

PATTERN

LAND (FREE OF SOLDER MASK)

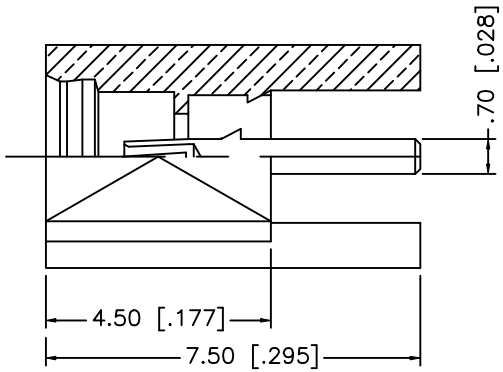


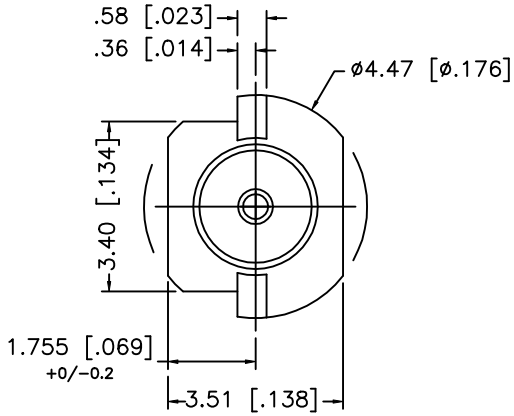


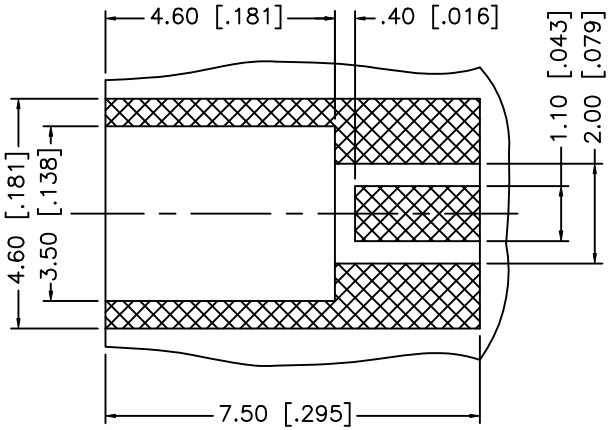


RECOMMENDED
MOUNTING HOLE

| | DESCRIPTION | MATERIAL | FINISH |
|---|---|---|---|
| 8 | | | |
| 7 | | | |
| 6 | | | |
| 5 | | | |
| 4 | | | |
| 3 | CONTACT PIN | BER. COPPER | GOLD |
| 2 | INSULATOR | TEFLON | NATURAL |
| 1 | BODY | BRASS | GOLD |

UNLESS OTHERWISE SPECIFIED DIMENSIONS ARE IN MILLIMETERS

DIMENSIONS IN [ ] ARE IN INCHES FOR CUSTOMER REFERANCE ONLY

UNLESS OTHERWISE SPECIFIED TOLERANCES FOR INCHES ARE:

.XXX = ± 0.005"
.XX = ± 0.010"
.X = ± 0.020"

DO NOT SCALE DRAWING

| APPROVALS | | DATE |
|---|---|---|
| DRAWN | G.R.S. | 08/29/02 |
| CHECKED | | |
| ISSUED | | |

**Amphenol - Connex**
**CONNECTOR CORPORATION**

TITLE: MMCX EDGECARD JACK

| SIZE | FSCM NO. | DWG. NO. | REV. |
|---|---|---|---|
| A | 99001 | 262107.DWG | NC |

| SCALE | PART NO. | SHEET |
|---|---|---|
| NA | 262107 | 1 OF 1 |