B-429CA REV. F

FAA/PMA

REVISIONS			RELEASED	
REV		DESCRIPTION	DATE	APPROVED
D	24767	ADD ITEMS 14 & 15 ITEM 4 WAS*39529-001* ITEM 6 WAS-*50407-143* ITEM 9 WAS *51704-163* ITEM 11 WAS-*51807-073*	93/09/21	WS
E	29044	1.51/1.37 WAS 1.43	95/10/25	RS
F	35177	NOTE 6 WAS*RES .1 AMP AT 5V*	98/03/27	RS

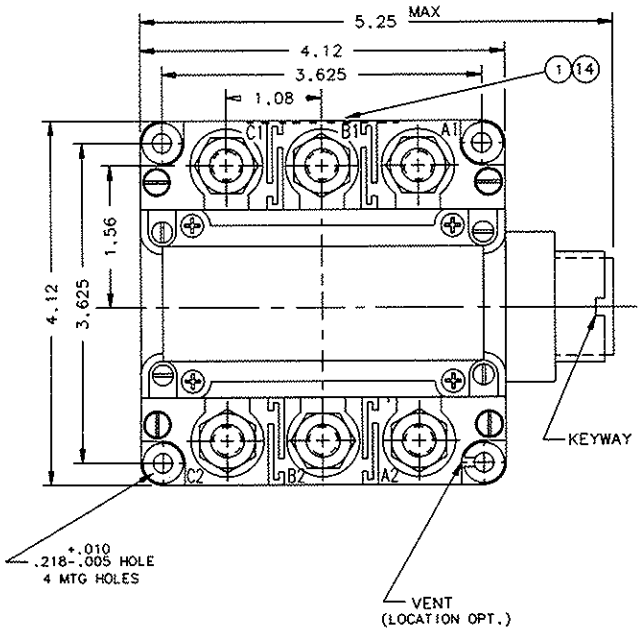

CONSTRUCTION	GASKET SEALED (VENTED)
MAIN CONTACTS	
CONFIGURATION	3PST N.O. (DOUBLE BREAK)
VOLTAGE	120/208 VOLTS FREQ. 400 HZ
CURRENT RES.	350 AMP 115/200 VAC CONTINUOUS
IND.	125 AMP
RUPTURE	3500 AMP
*AUXILIARY CONTACTS	
CONFIGURATION	4 SPDT
VOLTAGE	28 VDC. 115 VAC 400 HZ
CURRENT RES.	5 AMP , SEE NOTE 6
IND.	3 AMP
LAMP	2 AMP
COIL DATA	
DUTY CYCLE	CONTINUOUS (POWER DOWN)
OPERATING VOLTAGE	
NOMINAL	28 VDC
PICKUP MAX.	18 VDC
DROPOUT	1-7 VDC
INRUSH	2.7 AMP
HOLD	.56 AMP
ENVIRONMENTAL DATA	
OPERATING TEMP.	-55°C MIN. + 85°C MAX.
ALTITUDE	45,000 FT.
LIFE ELECTRICAL	50,000 CYCLES MIN.
LIFE MECHANICAL	100,000 CYCLES MIN.
WEIGHT MAX. (EST)	4 LBS.
OPERATE TIMES AT 28 VDC AT 25°C	
PICKUP	35MS
DROPOUT	35MS

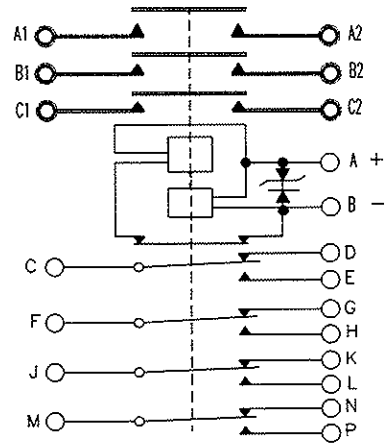

NOTES:
1. TERMINAL COVER ITEM NO. 2 REMOVED FROM TOP VIEW.
2. ITEMS NO. 1 & 5 LOCATION OPTIONAL
3. MOUNTING SURFACE SHALL PROVIDE ELECTRICAL GROUND.
4. THIS UNIT MEETS THE APPLICABLE PORTIONS OF MIL-R 6106
5. TRANSIENT VOLTAGE LIMITED TO 45 VOLTS MAX.
*6. AUXS J,K,L & M,N,P. CURRENT .1 AMP RES OR IND AT 28 VDC
7. DIODES TO BE JANTX 1000 PIV

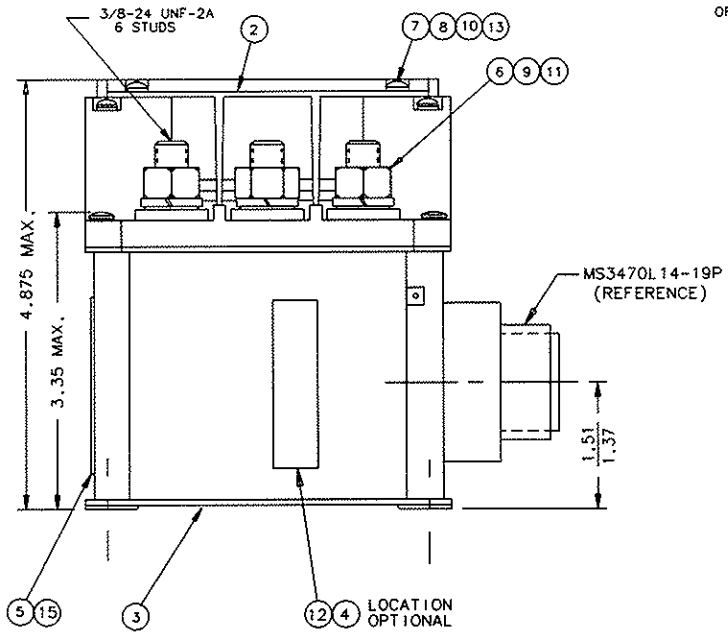

FIND NO	QTY REQD	PART OR IDENTIFYING NO	NOMENCLATURE OR DESCRIPTION	FSCM NO	DRAWING OR SPECIFICATION	MATERIAL OR NOTE
15	1	39529-002	OVERLAY			
14	1	39529-001	OVERLAY			
13	4	51701-180	WASHER 3/16 X .103 X .015			MYLAR
12	1	58400-117	PLATE-FAA/PMA			
11	6	51807-084	WASHER LOCK .375 .687 .094 S.P.			BRASS
10	4	51804-021	WASHER LOCK NO. 4 INT.			BRONZE
9	6	51704-024	WASHER-5/8 X 25/64 X .062 FLAT			BRASS
8	4	51701-291	WASHER .250 .113 .015 FLAT			STEEL
7	4	51204-391	SCREW 4-40 X 1/4 BD. HD.			STEEL
6	6	50407-164	NUT-3/8-24 X 5/8 X 7/32 HEX			BRASS
5	1	40820-002	PLATE-WIRING DIAGRAM			
4	1	39529-024	OVERLAY			
3	1	36813-040	CONTACTOR ASSEMBLY-PRIMARY			
2	2	35744-001	COVER-TERMINAL			
1	1	16043-001	PLATE-NAME			

UNLESS OTHERWISE SPECIFIED DIMENSIONS ARE IN INCHES TOLERANCES ON

2 PL DEC.	3 PL DEC.	ANGLES
±.06	±.010	± 1°

MATERIAL

REF: DOUGLAS MD-11

DR BY	RLS	98/04/13
CHK BY	RS	98/04/13
ENGR	WZR	98/04/17
MFG	[illegible]	98/04/15
RELEASE		
CONTR NO.		
GOVT APPVL		

HARTMAN ELECTRICAL MANUFACTURING
MANSFIELD, OHIO

CONTACTOR-3PST N.O.
350 AMP 120/208V 400 HZ
093

SIZE	CODE IDENT	DWG NO.
C	74063	B-429CA

SCALE NONE SHEET