THIS DRAWING IS UNPUBLISHED. RELEASED FOR PUBLICATION - ,- .
© COPYRIGHT - By - ALL RIGHTS RESERVED.

REVISIONS

P	LTR	DESCRIPTION	DATE	DWN	APVD
	M	REVISED PER ECO-12-015521	28SEP12	KH	MZ
	N	REVISED PER ECR-16-015135	24NOV2016	RS	MZ

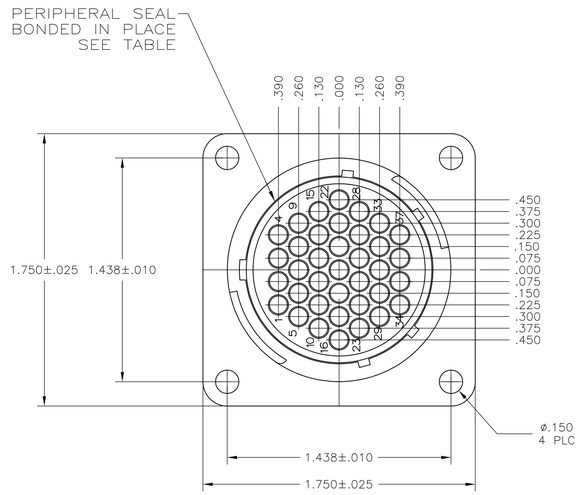

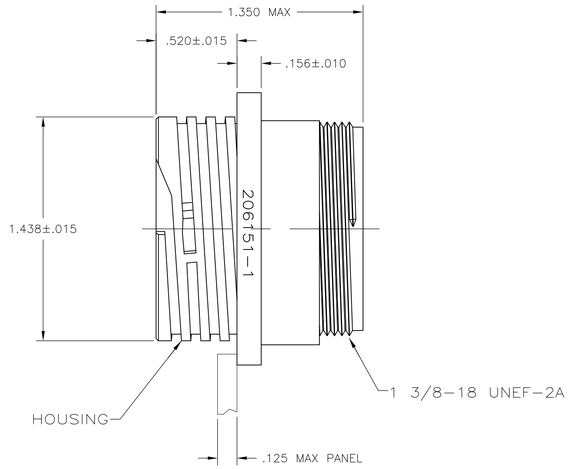

DETAIL A

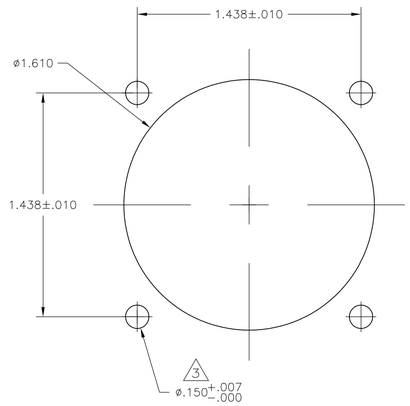

RECOMMENDED PANEL CUTOUT

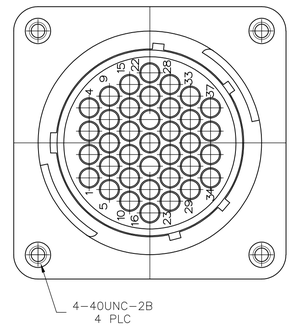

DETAIL C
206151-6 ONLY

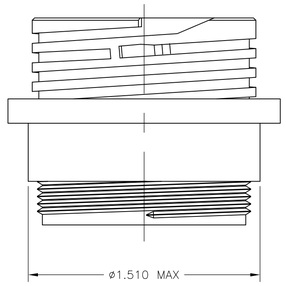

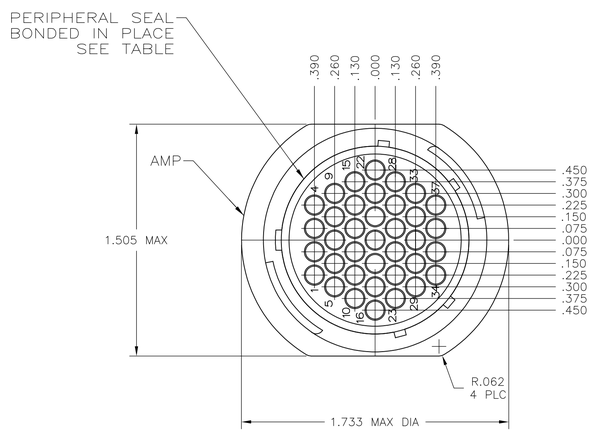

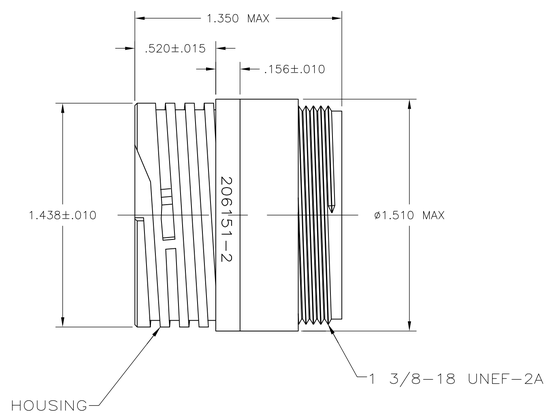

DETAIL B

1 CAVITY IDENTIFICATION ON FRONT AND REAR FACE.

2 WILL ACCEPT THIRTY-SEVEN (37) MULTIMATE PIN CONTACTS.

3 NO 4 FASTENER RECOMMENDED FOR MOUNTING.

4 WHITE DOT NEAR POSTION 1 ON WIRE ENTRY FACE.

5 OBSOLETE PARTS: OBSOLETE CIS STREAMLINING PER D.RENAUD/D.SINISI

4	STANDARD	YES	A	206151-8
5 OBSOLETE	STANDARD	NO	A & C	~~206151-6~~
5 OBSOLETE	SMALL PACK	NO	A	~~206151-5~~
	STANDARD	YES	B	206151-4
	STANDARD	YES	A	206151-3
	STANDARD	NO	B	206151-2
	STANDARD	NO	A	206151-1
	PACKAGING	PERIPHERAL SEAL	SEE DETAIL	PART NUMBER

THIS DRAWING IS A CONTROLLED DOCUMENT.

DIMENSIONS: INCHES

TOLERANCES UNLESS OTHERWISE SPECIFIED:
0 PLC ± -
1 PLC ± -
2 PLC ± -
3 PLC ± .005
4 PLC ± -
ANGLES ± -

MATERIAL: HOUSING: NYLON BLACK; SEAL: ELASTOMER, GREY

FINISH: -

DWN S SCHLEGEL 06DEC2002
CHK A FRANTUM 8/13/83
APVD R STONE 8/13/83

PRODUCT SPEC —
APPLICATION SPEC —
WEIGHT —

TE Connectivity

NAME: RECEPTACLE HOUSING, STANDARD SEX, SHELL SIZE 23, CPC

SIZE	CAGE CODE	DRAWING NO	RESTRICTED TO
A1	00779	C-206151	—

CUSTOMER DRAWING | SCALE 2:1 | SHEET 1 OF 1 | REV N

4805 (1/15)