INTERCONNECTS

SERIES 830, 831, 832, 833 • 2mm GRID HEADERS AND SOCKETS • SINGLE AND DOUBLE ROW STRIPS

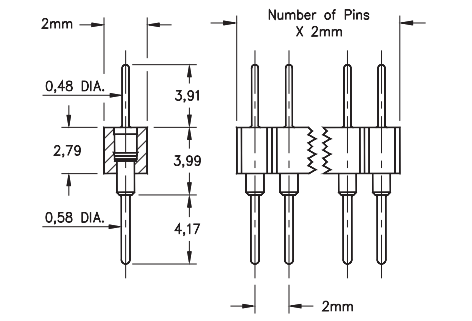

FIG. 1

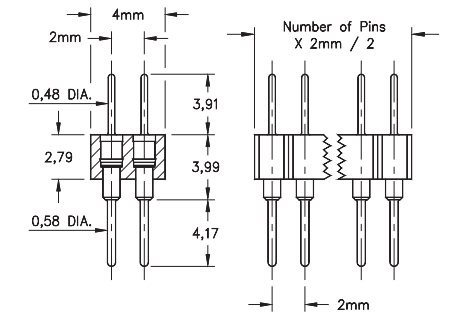

FIG. 2

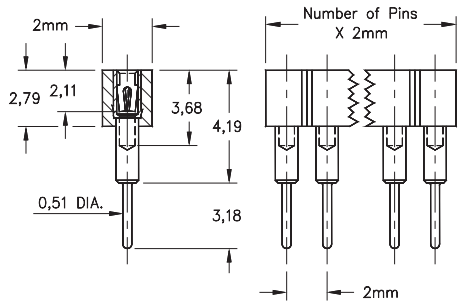

FIG. 3

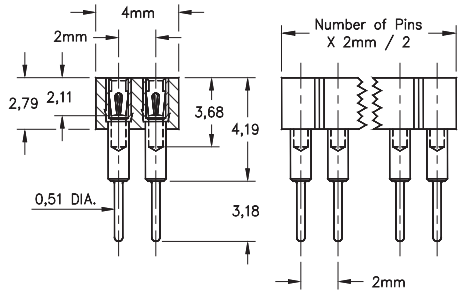

FIG. 4

- Series 830 single & double row interconnects have 2mm pin spacing and permit board stacking as low as 8,18
- Pin headers (830 & 832 series) use MM #5012 pins. See page 208 for details
- Sockets (831 & 833 series) use MM #1802 receptacles and accept pin diameters from 0,38 - 0,64. See page 169 for details
- Contact is rated at 3 amps
- Insulators are high temperature thermoplastic, suitable for all soldering operations

ORDERING INFORMATION

FIG. 1	**Series 830...001**	**Single Row Pin Header**
	830-XX-0_ _-10-001000	
	Specify number of pins	01-50
FIG. 2	**Series 832...001**	**Double Row Pin Header**
	832-XX-_ _ _-10-001000	
	Specify number of pins	002-100

RoHS-2 2011/65/EU

XX=Plating Code See Below

For Electrical, Mechanical & Enviromental Data, See page 264

SPECIFY PLATING CODE XX=	10 ◆	90	40 ◆
Pin Plating	0,25µm Au	5,08µm Sn/Pb	5,08µm Sn

FIG. 3	**Series 831...001**	**Single Row Socket**
	831-XX-0_ _-10-001000	
	Specify number of pins	01-50
FIG. 4	**Series 833...001**	**Double Row Socket**
	833-XX-_ _ _-10-001000	
	Specify number of pins	002-100

RoHS-2 2011/65/EU

XX=Plating Code See Below

For Electrical, Mechanical & Enviromental Data, See page 264

SPECIFY PLATING CODE XX=		91	93		41 ◆	43 ◆	
Sleeve (Pin)		5,08µm Sn/Pb	5,08µm Sn/Pb		5,08µm Sn	5,08µm Sn	
Contact (Clip)		0,25µm Au	0,76µm Au		0,25µm Au	0,76µm Au	