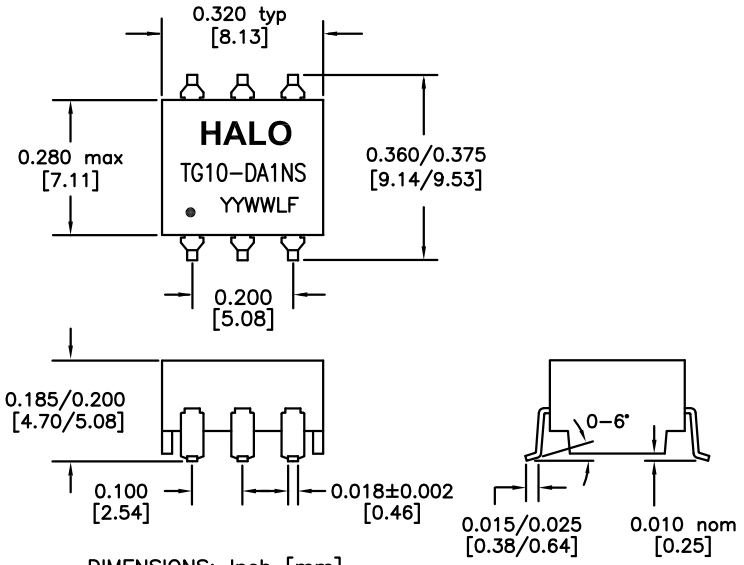

DIMENSIONS: Inch [mm]
CO-PLANARITY: 0.004 [0.10]
TOLERANCES: ±0.005 INCH IF NOT SPECIFIED

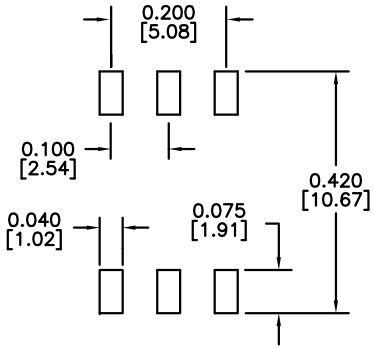

RECOMMENDED SOLDER PAD DIMENSIONS

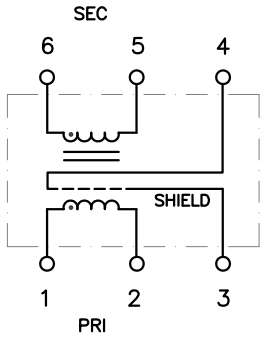

ONLY ONE END OF THE SHIELD CAN BE GROUNDED

PART NO. : TG10-DA1NSLF

6PIN SMT ISOLATION MODULE

DESIGNED FOR CIRRUS LOGIC DIGITAL AUDIO INTERFACE APPLICATIONS

LEAD-FREE/RoHS COMPLIANT

COMPATIBLE TO LEAD-FREE SOLDERING PROCESS CONDITION PER IPC/JEDEC J-STD-020C

UL/EN60950 AND DEMKO RECOGNIZED

EXTENDED OPERATING TEMPERATURE -40/+85°C

ELECTRICAL SPECIFICATIONS @25°C

TURNS RATIO	
P1-2:P6-5	1:1 ±2%
OCL (100KHz,0.1V)	
P1-2	750µH nom
DCR P1-2	0.5Ω max
LL P1-2	1.0µH max
Cw/w P1-6	18pF max
(Ground P3)	9pF max
BANDWIDTH (Nominal)	10kHz-200MHz
ISOLATION	
PRI - SEC	1500Vrms
PRI,SEC - SHIELD	1500Vrms

HALO/PBL

CALIFORNIA, USA
KOWLOON, HONG KONG
SINGAPORE

TITLE	ISOLATION MODULE		
FOR	CIRRUS LOGIC DIGITAL AUDIO		
PART NO.	TG10-DA1NSLF		
SCALE	NONE	PAGE	1 OF 1

SIGNATURES		DATE	REV.	DESC.	DATE
DRAWN	LI ZHI ZHONG	5/4/16	A	PROD. RELEASE	5/4/16
CHECKED	LEI KEONG	8/8/16	B	ADD BW SPEC.	5/13/16
APPROVED	PETER LU	8/8/16	C	UPDATE	5/17/16
FILE	DA1NSLF.DWG		D	UPDATE DESC.	8/8/16