ENCLOSURE DRAWING (To convert to inches divide by 25.4.)

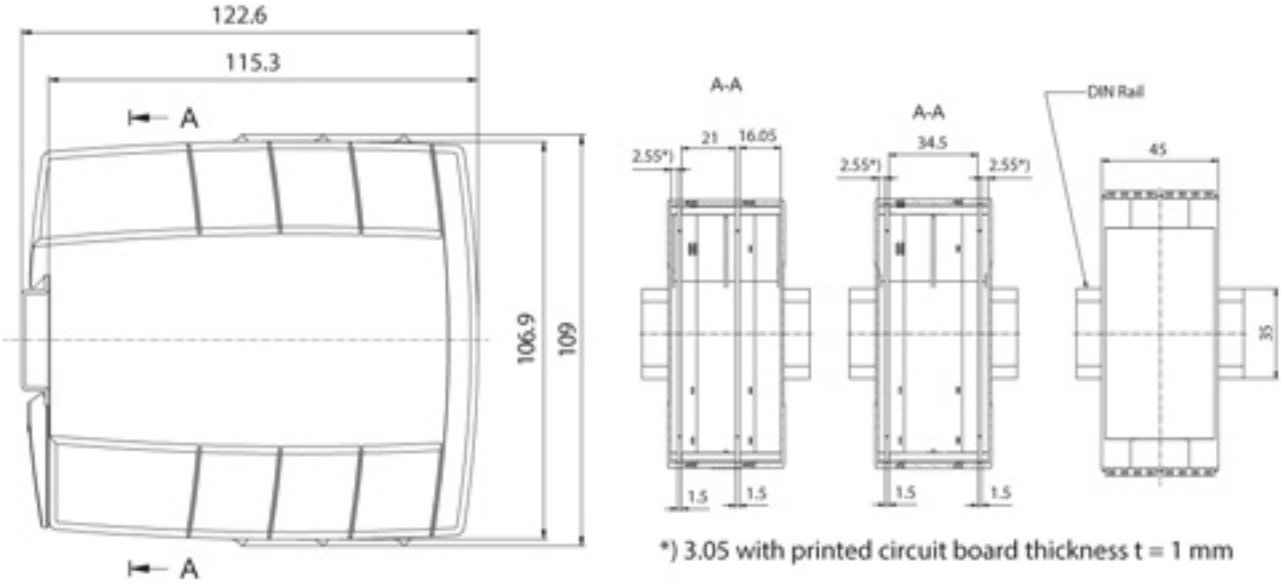

*) 3.05 with printed circuit board thickness t = 1 mm
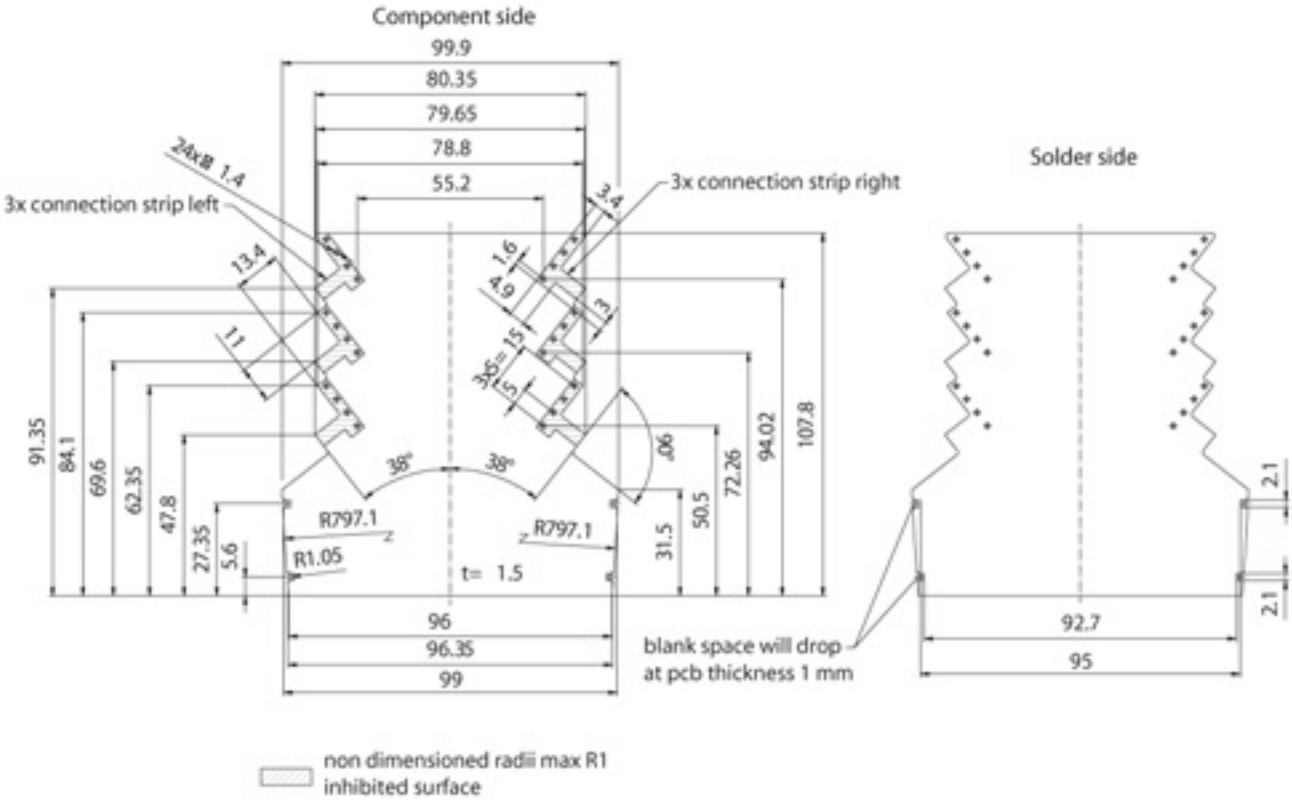
PCB DRAWING (To convert to inches divide by 25.4.)