REVISIONS				
REV. SYM.	E.C.O. NUMBER	DESCRIPTION	BY DATE	APP'D DATE
1		ORIGINAL RELEASE	JWJ 1/5/00	RRR 1/5/00

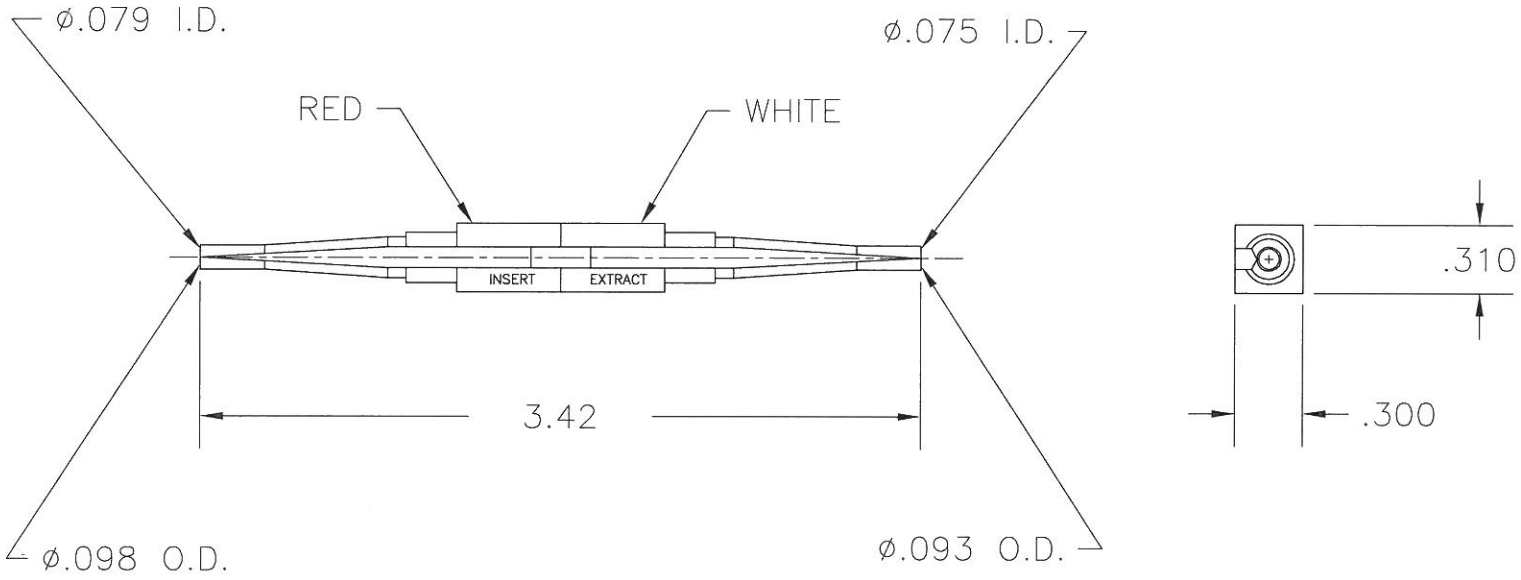

RESTRICTED & CONFIDENTIAL

CONFIDENTIAL PROPERTY OF DANIELS MANUFACTURING CORP. NOT TO BE DISCLOSED TO OTHERS, REPRODUCED OR USED FOR ANY OTHER PURPOSE, EXCEPT AS AUTHORIZED IN WRITING BY DANIELS MANUFACTURING. MUST BE RETURNED TO DANIELS MANUFACTURING CORP. ON COMPLETION OF ORDER OR OTHER PURPOSE FOR WHICH LENT.

DO NOT SCALE DRAWING

MATERIAL

HEAT TREAT

FINISH

ITEM	PART NO.	QTY.	DESCRIPTION/REMARKS

DRN. J. JOYCE	DATE 1/5/00	DANIELS MANUFACTURING CORP. ORLANDO, FLORIDA CAGE 11851	
CHK'D. RRR	DATE 1/5/00		
APP'D.	DATE	TITLE INSERTION/REMOVAL TOOL ENVELOPE DRAWING (MS27534-20)	
APP'D.	DATE	WHERE USED:	

NOTE:
THIS DRAWING IS AN OUTLINE DRAWING OF THE RESPECTIVE DMC PART NUMBER INDICATED. ACTUAL DMC PART NUMBER IS DRAWING NUMBER WITHOUT THE "-ENV" SUFFIX.

SIZE	SCALE	CAD P/N	SHEET	OF
A	NTS	MS27534-20-ENV	1	1
POSTING		DWG. NO. MS27534-20-ENV	REV. 1	