THIS DRAWING IS UNPUBLISHED. RELEASED FOR PUBLICATION 20
© COPYRIGHT 20 BY - ALL RIGHTS RESERVED.

REVISIONS

P	LTR	DESCRIPTION	DATE	DWN	APVD
	A	RELEASED TO PROD FROM REV.4	17DEC2018	RV	DH

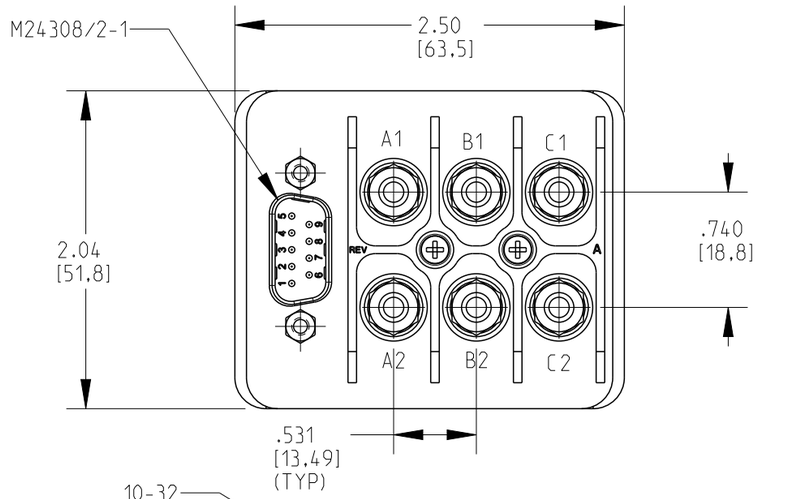

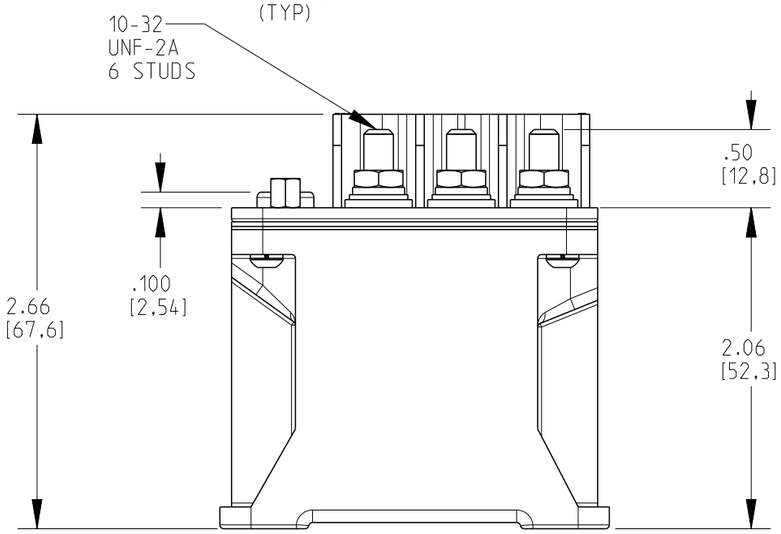

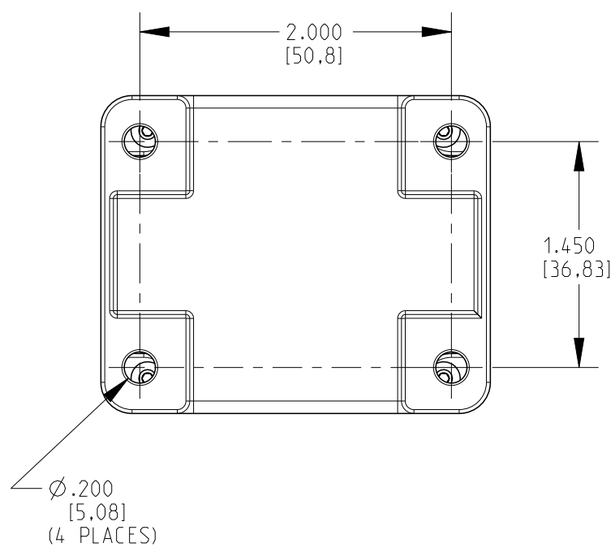

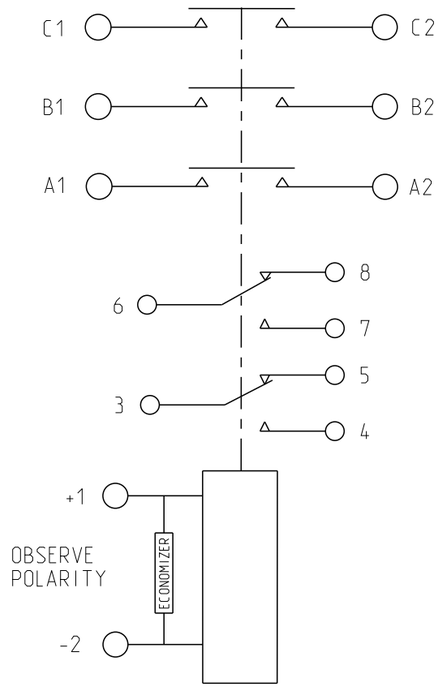

CONNECTOR PIN CONFIGURATION

CONSTRUCTION	GASKET SEALED
ELECTRICAL CHARACTERISTICS	
MAIN CONTACT CONFIGURATION	3 SPST N.O. DOUBLE MAKE
VOLTAGE	115 VAC,400HZ
CURRENT	
RESISTIVE	60 AMPS
AUXILIARY CONTACTS	
CONFIGURATION	2 SPDT
VOLTAGE	28 VDC
CURRENT	2 AMPS
COIL DATA	
DUTY CYCLE	CONTINUOUS (ECONOMIZED)
NOM. OPERATE VOLTAGE	28 VDC
PICKUP VOLTAGE	18 VDC MAX (INSTANTANEOUSLY)
DROP VOLTAGE	1-9 VDC
PICKUP TIME	15 mS @28VDC
DROPOUT TIME	15 mS @28VDC
COIL CURRENT	
INRUSH	5 AMPS MAX AT 28 VDC & 25°C
HOLDING	300 mA MAX AT 28 VDC & 25°C
SUPPRESSION	±45 VDC
CONTACT BOUNCE	
MAIN CONTACT	1 mS
AUX CONTACT	1 mS
ENVIRONMENTAL DATA	
TEMPERATURE	-55°C TO +85°C
ALTITUDE	50,000 FEET
LIFE ELECTRICAL	50,000 CYCLES MIN. (RESISTIVE)
LIFE MECHANICAL	100,000 CYCLES MIN. (@25% RATED RESISTIVE LOAD)
WEIGHT	0.59 LBS

TE # 5-1617818-0

THIS DRAWING IS A CONTROLLED DOCUMENT.

DIMENSIONS: INCHES[mm]

TOLERANCES UNLESS OTHERWISE SPECIFIED:
0 PLC ±
1 PLC ±
2 PLC ±0.06
3 PLC ±0.02
4 PLC ±
ANGLES ±1°

MATERIAL - -
FINISH - -

DWN SK 03DEC2018
CHK SC 03DEC2018
APVD DH 03DEC2018
PRODUCT SPEC -
APPLICATION SPEC -
WEIGHT -

TE Connectivity

NAME FCC-360 3PST THREADED MOUNT, 60AMPS -

SIZE	CAGE CODE	DRAWING NO	RESTRICTED TO
A3	00779	FCC-360-CU4	

SCALE NONE SHEET 1 OF 1 REV A

1470-19 (3/13)