LEAD-FREE PART NUMBER	PCB THICKNESS
85985-001LF	3.2 mm

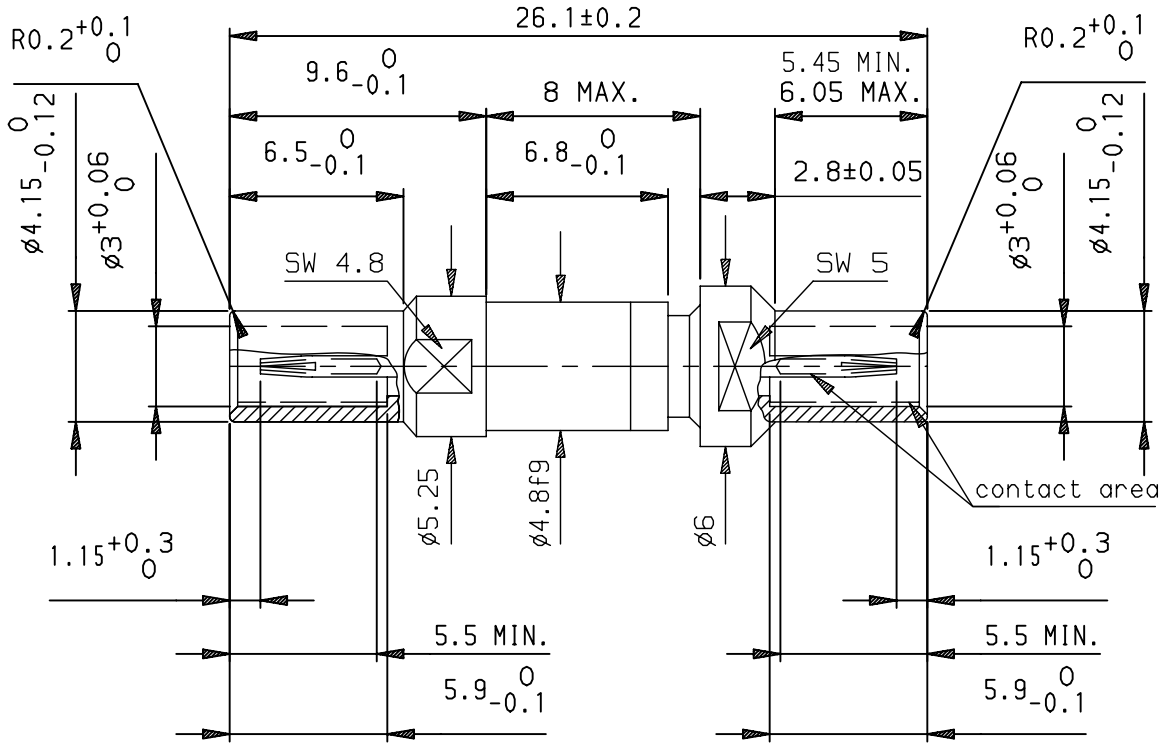

1.3µm Au MIN
PLATING CONTACT AREA

NOTES:
1 UNDERPLATING Ni
2 DIM. ACC. DIN 41626
3 GEN. TOL. ±0.10
4. THIS PRODUCT WITH "LF" SUFFIX MEETS EURPOEAN UNION DIRECTIVES AND OTHER COUNTRY REGULATIONS AS DESCRIBED IN GS -22-008.
5. THE PRODUCT IS NOT INTENDED TO BE EXPOSED TO A MANUFACTURING SOLDER PROCESS.
6. PACKAGING SPEC: SEE GS-14-920

rev	ecn no	dr	date
D	LS06-0022	LGO	2006/03/06
E	LS07-0214	LGO	2007/08/21
F	LS08-0057	LGO	2008/02/18
-	-	-	-
-	-	-	-
-	-	-	-
-	-	-	-

European Views

www.fciconnect.com

surface ISO 1302 | tolerance std ISO 406 ISO 1101 | projection | mm

TOLERANCES UNLESS OTHERWISE SPECIFIED

Dr	GOISNARD	2006/03/06	ANGULAR	LINEAR	0.X	±0.1	size A3
Eng	GOISNARD	2006/03/06			0.XX	±0.1	Scale 5
Chr	LEGARE	2006/03/06	0.XX° ±2°		0.XXX	±0.1	ECN LS08-0057
Appr	LEGARE	2006/03/06	Product family			METRAL	Spec ref -

title: DIN COAX RCP
COUPLER ADJUSTABLE

dwg no 85985 | Rev. F

catalog no - | CUSTOMER | sheet 1 of 1

Copyright FCI.

REV F - 2006-04-17