THIS DRAWING IS UNPUBLISHED.
VERTRAULICHE UNVEROEFFENTLICHTE ZEICHNUNG
© COPYRIGHT 2006 BY Tyco Electronics AMP GmbH
RELEASED FOR PUBLICATION 2006
FREI FUER VEROEFFENTLICHUNG
ALL RIGHTS RESERVED.
ALLE RECHTE VORBEHALTEN.

MATED WITH:
PASSEND ZU:

PROJEKT NR.:

REVISIONS
AENDERUNGEN

| P | LTR | DESCRIPTION BESCHREIBUNG | DATE | DWN | APVD |
|---|---|---|---|---|---|
| | C3 | VARIANT 0--3 ADDED PER PCN E-15-007254 | 12MAY2015 | ER | DO |
| | C4 | ECR-15-014241 | 14OCT2015 | GSK | JB |
| | C5 | LASER PRINT PARTIAL MOVED TO ITEM NO.1 (PCN E-16-013596) | 28SEP2016 | ER | DO |
| | C6 | LASER PRINT PARTIAL ADDED FROM ITEM NO.1 (PCN E-17-007296) | 02JUN2017 | ER | DO |

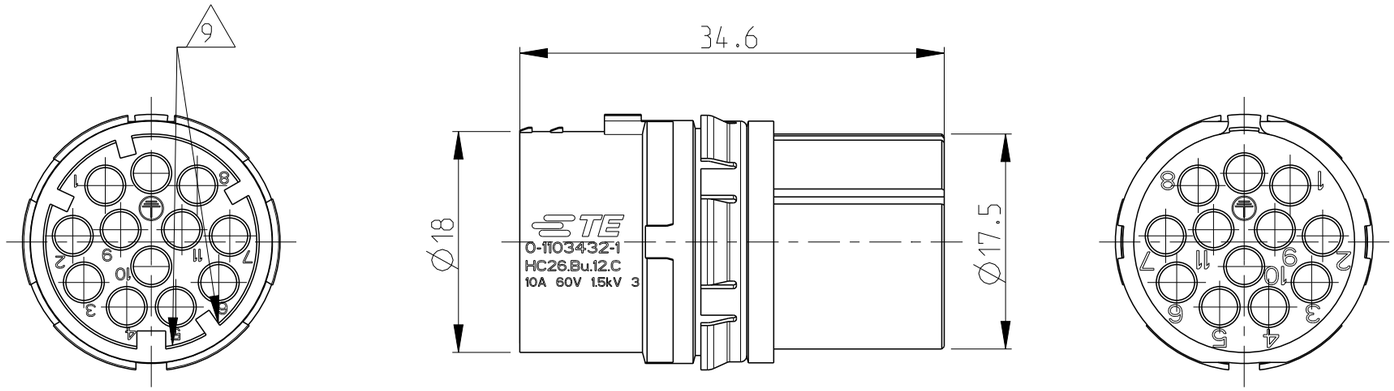


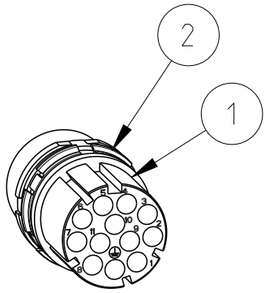


SCALE 1:1

PN 0-1 AS SHOWN

Notes

1 SUITABLE HOUSINGS: SERIES HC26
CUSTOMER DRAWING: 11034XX/33/34/36/37/39/40/70

2 OUTER DIMENSIONS OF INSULATION: MAX. Ø3.2 MM

3 SUITABLE CRIMP CONTACTS:
CUSTOMER DRAWING: 166824

4 SUITABLE SUB-MIN. COAXICON CONTACTS:
CUSTOMER DRAWING: 51565

5 SUITABLE LWL (OPTICS) CONTACTS:
CUSTOMER DRAWING: 216342 AND 1102921

6 SUITABLE INSERTION TOOL:
CUSTOMER DRAWING: 1102855

7 SUITABLE EXTRACTION TOOL:
CUSTOMER DRAWING: 1102855

8 STANDARDS:
DIN EN 61984, DIN EN 60664-1

9 POLARIZATION RIPS

10 PACKAGING PN 0-1 AND 0-3:
40 SETS IN A CARTON

11 PACKAGING PN 0-2:
500 SETS IN A CARTON

**NOT SPECIFIED DIMENSIONS AND NOTES SEE 0-1**

**NICHT ANGEGEBENE BEMASSUNGEN UND BEMERKUNGEN SIEHE 0-1**

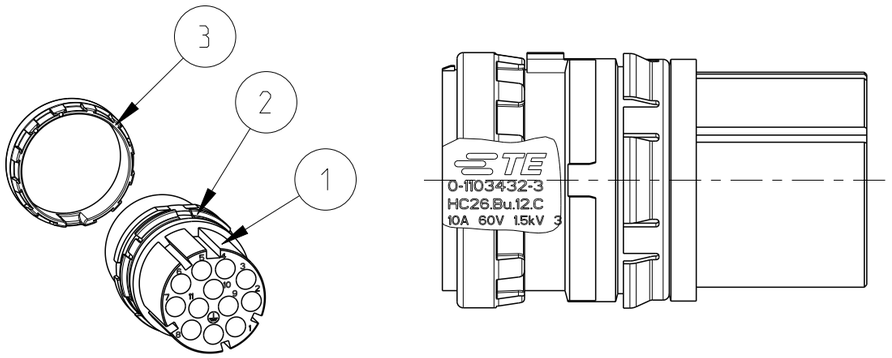


SCALE 1:1

PN 0-3 AS SHOWN

| QTY/PN | | | DESCRIPTION | MATERIAL | SURFACE/COLOR | NOTE | ITEM |
|---|---|---|---|---|---|---|---|
| 1 | – | – | ADAPTOR RING | PA66-GF25 | GREY | SERIES HC26, INSERT | 3 |
| 1 | 1 | 1 | RETAINING RING | PA66-GF25 | GREY | SERIES HC26, INSERT | 2 |
| 1 | 1 | 1 | FEMALE INSERT | PBT-GF10 | GREY | SERIES HC26, 12 POS. TYPE III+ | 1 |
| 0-3 | 0-2 | 0-1 | | | | | |

PARTS LIST ( PER UNIT )

THIS DRAWING IS A CONTROLLED DOCUMENT.
DIMENSIONING AND TOLERANCING PER GPS (ISO STANDARDS).

DIMENSIONS: MASSEINHEITEN: mm

TOLERANCES UNLESS OTHERWISE SPECIFIED: ALLGEMEINTOLERANZEN
0 PLC ±-
1 PLC ±-
2 PLC ±-
3 PLC ±-
4 PLC ±-
ANGLES/WINKEL ±-

MATERIAL –
–

FINISH/OBERFLAECHE/FARBE –
–

DWN H.BRAUN 08NOV2007
CHK T.VETTER 28OCT2008
APVD T.SCHNURPFEIL 28OCT2008
PRODUCT SPEC PRODUKTSPEZ. 108-74097
APPLICATION SPEC VERARBEITUNGSSPEZ. 114-74103
WEIGHT GEWICHT –

TE Connectivity

NAME
FEMALE INSERT ASS'Y
SERIES HC26, 12-POS., TYPE III+
CIRCULAR HYBRID CONNECTOR

| SIZE | CAGE CODE | DRAWING NO ZEICHNUNGS-NR. | RESTRICTED TO NUR FUER |
|---|---|---|---|
| A3 | 00779 | C-1103432 | – |

CUSTOMER DRAWING /KUNDENZEICHNUNG
SCALE MASSSTAB 2:1 SHEET BLATT 1 OF VON 1 REV C6