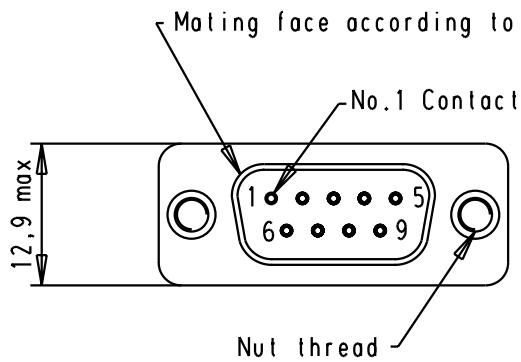

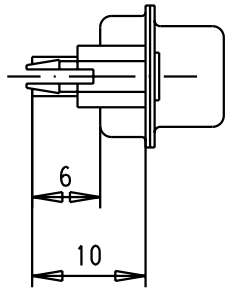

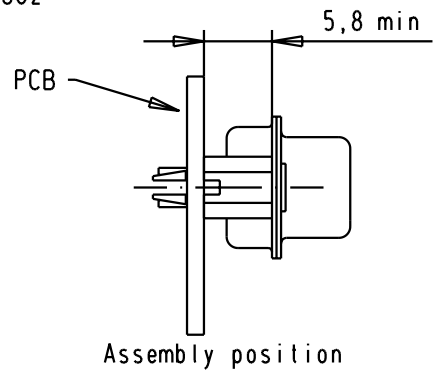

SPECIFICATION

Mating Cycles	200
Capacitance	47pf±20%
Working Voltage	100v
Current Rating	7,5A
Insulation Resistance	>1GΩ

FREQUENCY (MHz)	ATTENUATION dB
5	-
10	-
50	-
100	-
500	30dB
1000	35dB

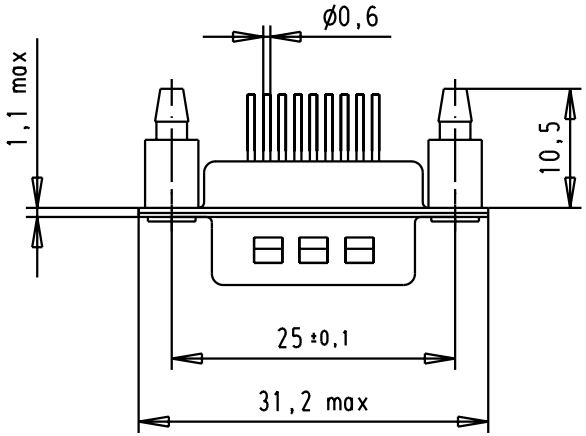

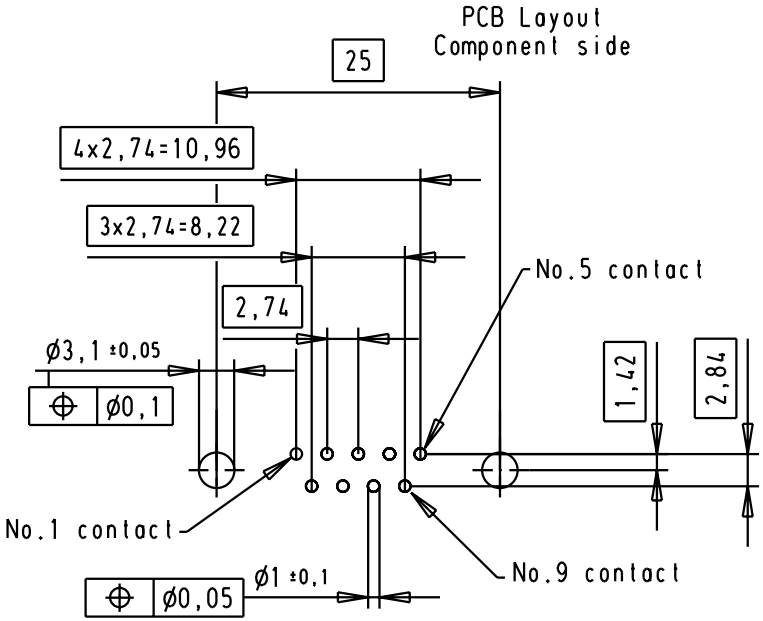

							Dat.	Name		D-Sub, male, straight, 9 Poles, with turned solder pin, spacer nut with clip	Ma?Mstab/ Scale
						Detail.	8-JUL-02	CV	All Dim. in mm Orig. Size DIN A 4		1.5:1
						Insp.					
						Stand.					
09641227216	M3								HARTING EURL F-95972 Paris	TB 0964122721x	Blatt/ Page 2/3
09641227215	UNC 4-40		31058	8-JUL-02	CV					Sub.	
Part number	Nut thread		Mod.	Dat.	Name						