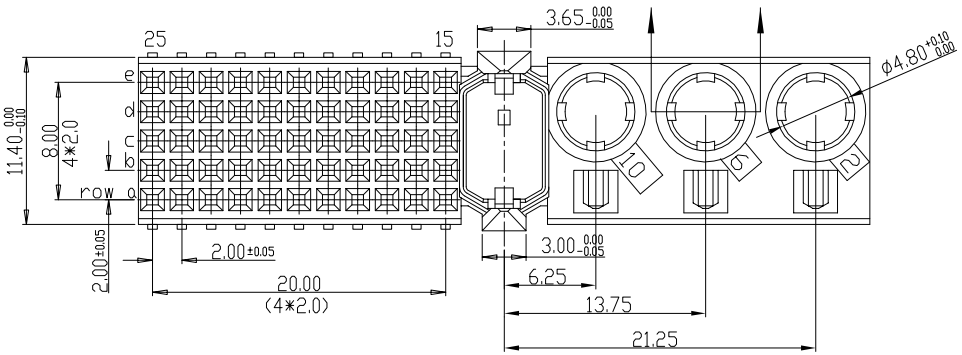

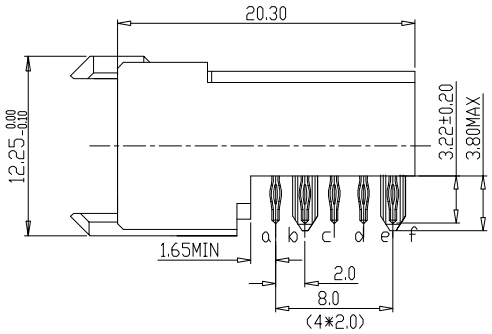

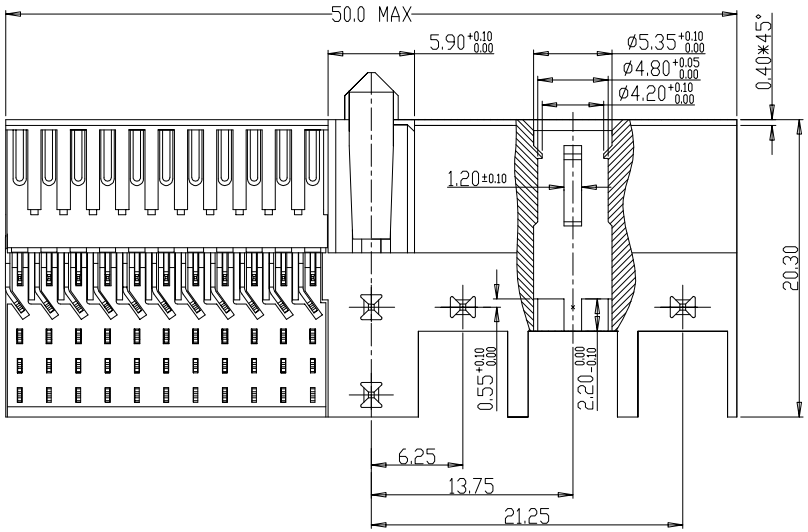

PERFORMANCE CHARACTERISTICS

CURRENT RATING: 1.5 A AT 20°C (FULLY LOADED)
1 A AT 70°C (FULLY LOADED)

RATED VOLTAGE:500 V AC (CONT /CONT)

OPERATING TEMPERATURE : -55°C TO 125°C

CONTACT RESISTANCE :20 mΩ MAX

INSERTION FORCE: 0.75N MAX/CONT

EXTRACTION FORCE : 0.15N MIN /CONT

INSULATION RESISTANCE: 10^4 MΩ MIN

NOTES

LEAD FREE INDICATOR :LF=LEAD FREE

1. PERFORMANCE LEVEL INDICATIOR (REF DWG NO.BS.C.201844.003

2. THIS PRODUCT IS CSA APPROVED.
THIS PRODUCT IS UL RECOGNIZED.

3.FOR RECOMMENDED PTH DIMENSIONS REFER DRAWING :BS.A.201572.001

4.THIS PRODUCT (LF) MEETS EUROPEAN UNION DIRECTIVES AND OTHER COUNTRY REGULATIONS AS DESCRIBED IN GS-22-008

LAY-OUT
P.C.B.- HOLE

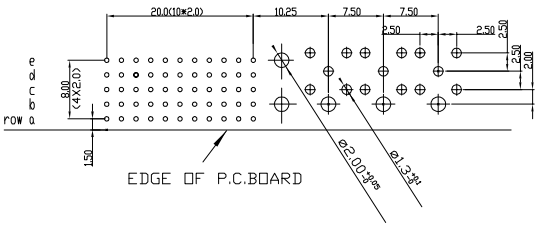

rev	ecn no	dr	date
A	CONVERSION REVISION 06	KN	14-09-01
B	I05-0081	ALEX	31-05-05
C	DG07-0362	Kasom	05-09-07
D	DG10-0110	NZ	05-30-10

Material			Spec ref		
Mat code					
Heattreat					
Plating/Finish					
Dr	W.Panis	18-09-96			
Eng			Product family	MILLIPICS	
Chr			Model Name		
Appr			Model Revision		

tolerance: 1DEC±0.2 1DEC 2DEC ± 0.10 2DEC ANGLES±1°HOEKEN

projection

MM

size A4

Scale 1.500

ECN

REL Level

title: MPACS 5+2R RA RCP CONN TYPE M

dwg no: BS,C ,201418,005

Rev. D

Pro/E file

catalog no: HM2R05PA5100----

CUMSTOMER

sheet 1 of 1

Tous droits strictement reserves. Reproduction ou communication a des tiers interdite sous quelque forme que ce soit sans autorisation ecrite du propietaire. Propriete de c FCI. Droits de reproduction FCI.

All rights strictly reserved. Reproduction or issue to third parties in any form whatever is not permitted without written authority from the proprietor. Property of FCI. Copyright FCI.