SIGN	DATE	DESCRIPTION	APPROVER
1	01/18'07	Soldering temperature changed from 245° to 250°	Tason
2	01/18'07	Part No is Changed	Tason
3	03/25'09	Add the tolerance table	Jacke
THIS IS CAD DRAWING, DO NOT REVISE MANUALLY!!!			

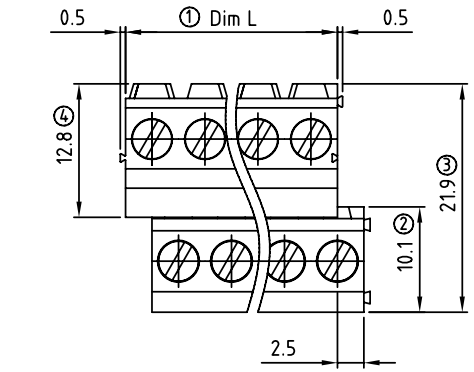

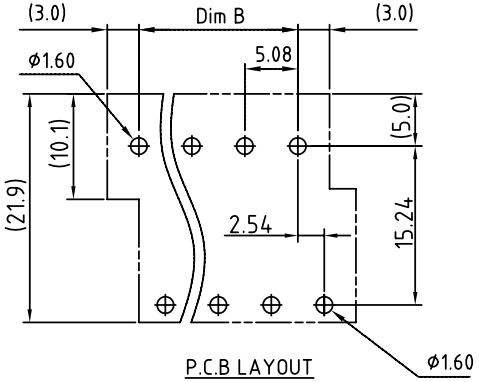

P.C.B LAYOUT

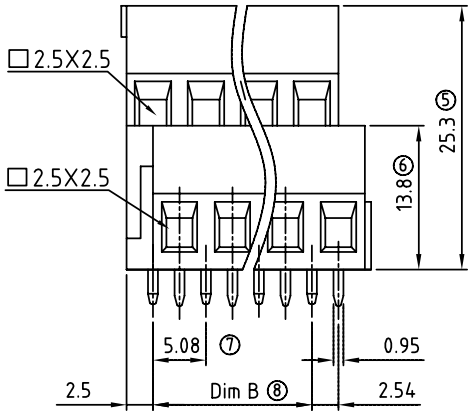

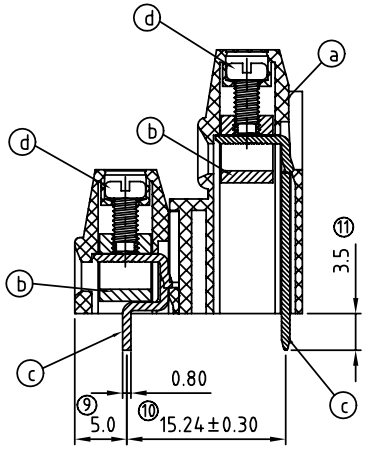

Material

- Item a Terminal housing :Thermoplastic (UL 94V-0)
- Item b Clamp : Brass Ni plated
- Item c Wire guard solder pin :Brass ,Tin plated
- Item d Terminal screw: Steel Zinc plating"-"slot type

Electrical

- Voltage rating: 300VAC
- Current rating: 20A
- Wire range:
- Solid wire(AWG): 12-22
- Stranded wire(AWG): 12-22
- Torque(Lb-In): 3.5
- Screw: M2.5
- Wire strip length: 6-7mm
- Withstanding Voltage: 1.6KV
- Operating temperature: -40°C to +115°C
- 1 Soldering temperature: 250°C±10°C/5 Sec
- Safety Approval: c UL us

2 YL xx 6 1 x 0 xxxx G

04	2×2 CONTACTS
06	2×3 CONTACTS
...	...
48	2×24 CONTACTS
64	2×32 CONTACTS

COLOR

0:	BLACK
5:	GREEN
6:	BLUE
8:	GREY

0000 @ logo
000A ANYTEK logo
(Steel screw plating Cr^{3+})
Any special item by customer request, please contact sales department.

RoHS pb<40 , 000ppm

3

Poles	2x2	2x3	2x4	2x5	2x6	2x7	2x8	2x9	2x10	2x11	2x12	2x13
Dim L	10.16	15.24	20.32	25.40	30.48	35.56	40.64	45.72	50.80	55.88	60.96	66.04
Dim B	5.08	10.16	15.24	20.32	25.40	30.48	35.56	40.64	45.72	50.80	55.88	60.96
TOL	±0.20					±0.30						±0.35
Poles	2x14	2x15	2x16	2x17	2x18	2x19	2x20	2x21	2x22	2x23	2x24	
Dim L	71.12	76.20	81.28	86.36	91.44	96.52	101.60	106.68	111.76	116.84	121.92	
Dim B	66.04	71.12	76.20	81.28	86.36	91.44	96.52	101.60	106.68	111.76	116.84	
TOL	±0.35					±0.40						

ANYTEK

CUSTOMER COPY

ALL RIGHTS RESERVED. REPRODUCTION OR ISSUE TO THIRD PARTIES IN ANY FORM WHATEVER IS NOT PERMITTED WITHOUT WRITTEN AUTHORITY FROM THE PROPRIETOR. PROPERTY OF ANYTEK TECHNOLOGY CO., LTD

TITLE	YL-5.08mm Series "-" Right				
PART NO.	YLxx61x00000G			DWG NO.	8YL0102
APPROVED	CHECKED	DESIGNED	DRAWN	CUST NO.	
		Jacke 2009.03.25	Jacke 2009.03.25	UNIT: mm	
				SCALE: NONE	
				SHEET: 01/01	REV.: E

Tolerance	
X.	±0.50
X.X	±0.30
X.XX	±0.10
X°	±1°