REVISIONS				
REV. SYM.	E.C.O. NUMBER	DESCRIPTION	BY DATE	APP'D DATE
1		ORIGINAL RELEASE	LW 2/21/91	PD 2/21/91

UNCONTROLLED DOCUMENT WILL NOT BE UPDATED

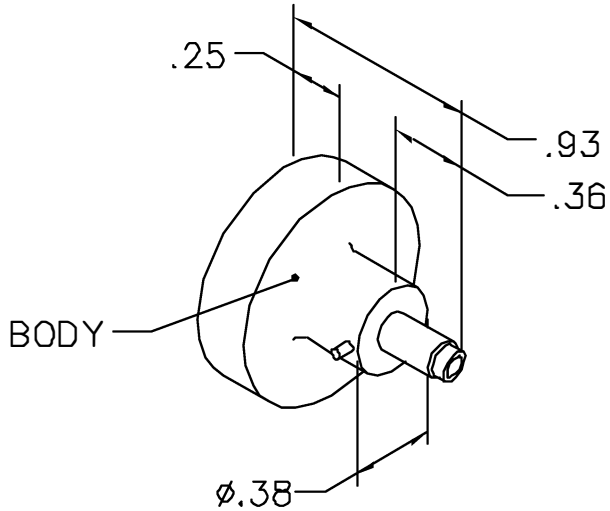

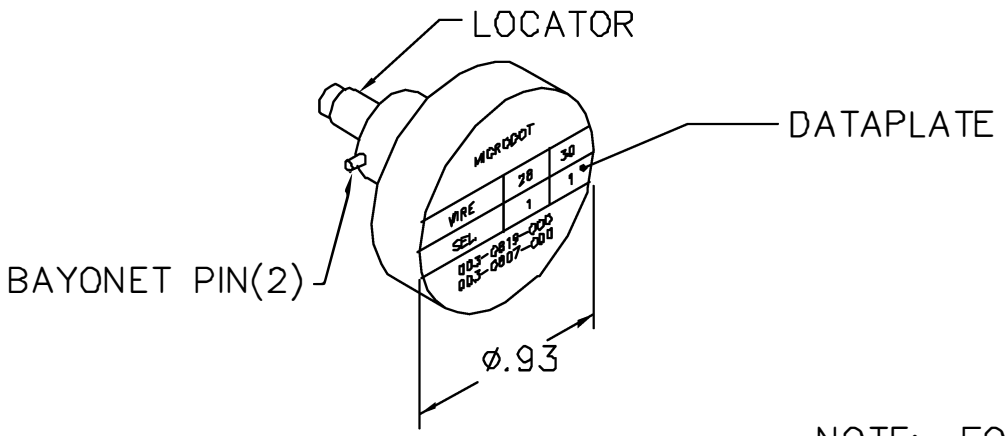

MICRODOT		
WIRE	28	30
SEL.	2	2
003-0819-0002 003-0807-0002		

NOTE: FOR USE WITH DANIELS CRIMP TOOLS ACCOMMODATING "K" SERIES POSITIONERS.

LOCATOR	
HOLE DIMENSIONS	ADDITIONAL FEATURES
ø.040 ↧ .208	⌴ ø.059 ↧ .155

RESTRICTED & CONFIDENTIAL

CONFIDENTIAL PROPERTY OF DANIELS MANUFACTURING CORP. NOT TO BE DISCLOSED TO OTHERS, REPRODUCED OR USED FOR ANY OTHER PURPOSE, EXCEPT AS AUTHORIZED IN WRITING BY DANIELS MANUFACTURING. MUST BE RETURNED TO DANIELS MANUFACTURING CORP. ON COMPLETION OF ORDER OR OTHER PURPOSE FOR WHICH LENT.

DO NOT SCALE DRAWING

DRN.	LW	DATE 2/21/91
CHK'D.	PD	DATE 2/21/91
APP'D.	AAM	DATE 2/21/91
APP'D.	JWV	DATE 2/21/91

DANIELS MANUFACTURING CORP.
ORLANDO, FLORIDA
CAGE 11851

TITLE: POSITIONER ENVELOPE DRAWING

WHERE USED: AFM8

SIZE	SCALE	CAD P/N	SHEET	OF
A	NTS	K79-ENV	1	1

POSTING	P/N	REV.
	K79-ENV	1