C TJ-108HC

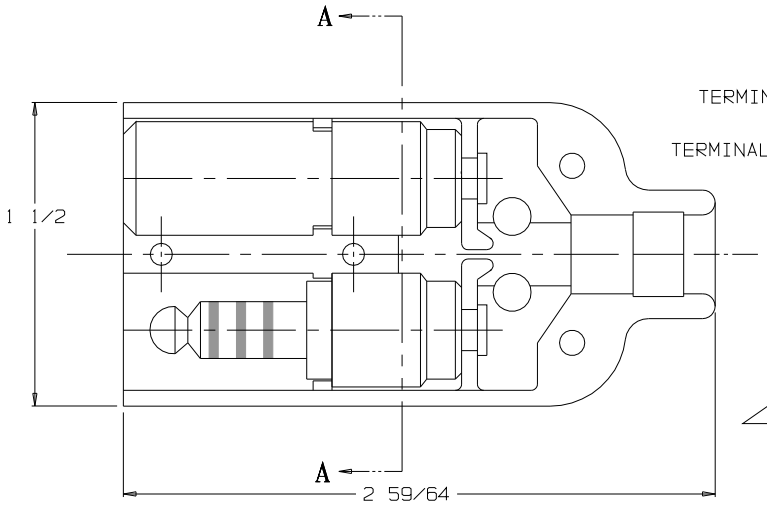

VIEW WITH HALF SHELL REMOVED

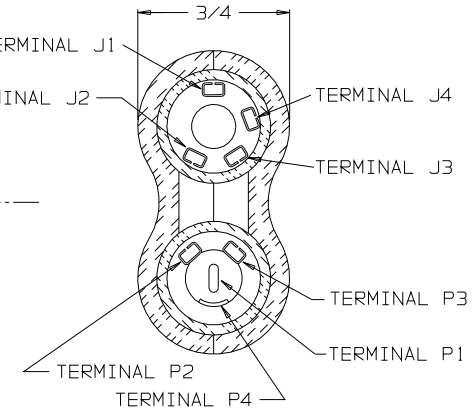

SECTION A-A

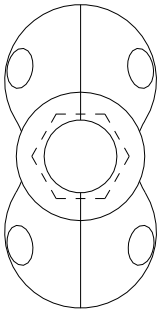

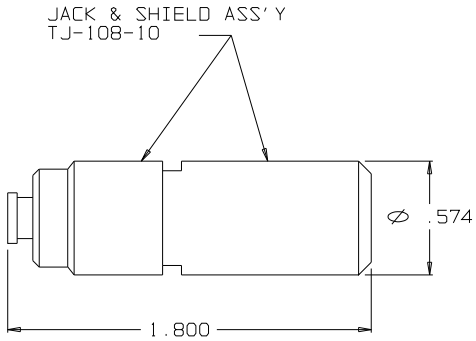

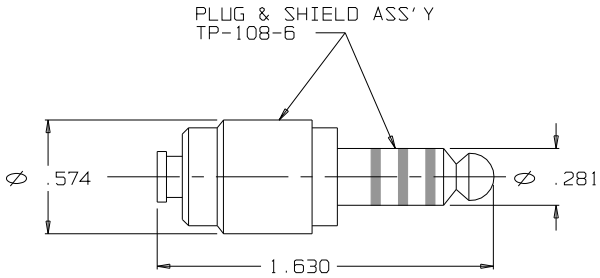

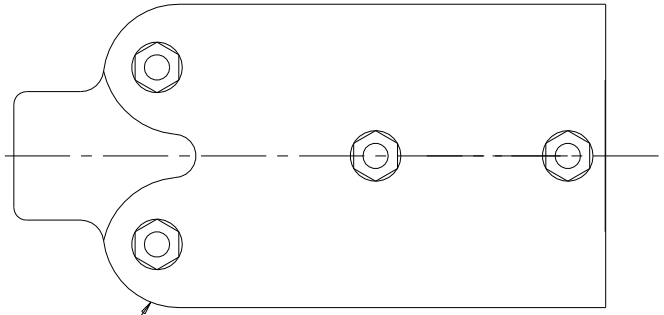

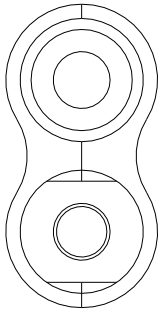

SHELL
TJ-108-1HC
(X2)

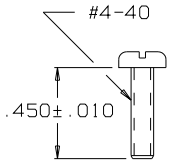

SCREW
TJ-106-12
(X4)

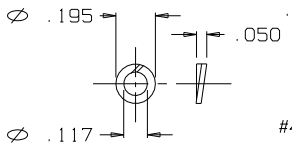

WASHER
TJ-106-13
(X4)

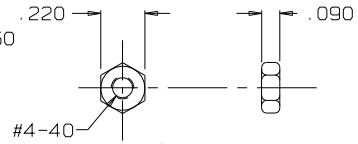

NUT
TJ-106-14
(X4)

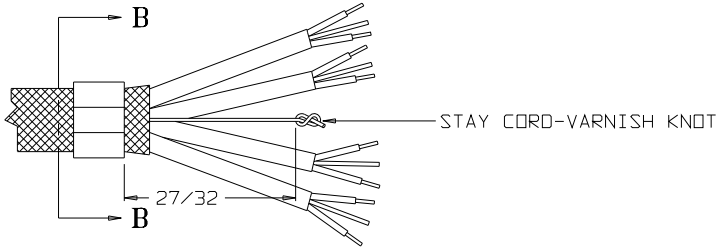

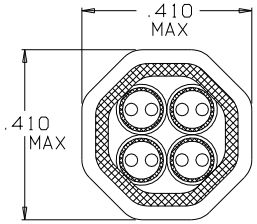

SECTION B-B

STRAIN RELIEF
CLAMP TJSS-106-12
AFTER CRIMPING
USE DANIELS HX4 CRIMP
TOOL AND Y146 DIE SET
SCALE 4:1

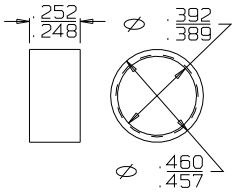

RING, STRAIN RELIEF
TJSS-106-12

THIS DOCUMENT CONTAINS PROPRIETARY INFORMATION OF NEXUS, INCORPORATED AND SUCH INFORMATION MAY NOT BE DISCLOSED TO OTHERS FOR ANY PURPOSE OR USED FOR ANY PURPOSE WITHOUT THE WRITTEN CONSENT OF NEXUS.

LET.	REVISION	CN #	DATE	CHK.
D	DEL: TJ-106-21; TJS-104-3AM; TJ-106-24; TJS-106-19; TP-106-5; TJ-108-9; TP-106-5; TP-108-4; NOTE: CLIP CAN BE REVERSED FOR LH OR RH USE	148	1/17/13	HR
C	CHG: 5 27/32 TO 2 59/64	137	8/3/12	HR
B	ADD DANIELS HX4 CRIMP TOOL AND Y146 DIE SET	026	9/16/09	GPH
A	INITIAL RELEASE			

DWN. BY EWT — DATE 9/14/01
CHECKED BY — DATE
APPR. BY — DATE

UNLESS OTHERWISE SPECIFIED DIMENSIONS ARE IN INCHES
TOLERANCES ON
FRACTIONS DECIMALS ANGLES
+/- 1/64 +/-.005 —

MATERIAL ——
FINISH ——
WEIGHT —— SCALE 2:1
TITLE JACK-TELEPHONE-BIAXIAL SHIELDED (8) CONDUCTOR WITH HEX CRIMP
DO NOT SCALE DWG. SHEET 1 OF 1

NEXUS
STAMFORD, CONN
SIZE C DWG. NO. TJ-108HC