SIGN	DATE	DESCRIPTION	APPROVER
1	10/11'06	Added VDE standard	Steady
2	01/20.07	The soldering emperature from245° to 250°	Aaron
3	2010.08.12	The design is changed	Chen Bo

THIS IS CAD DRAWING, DO NOT REVISE MANUALLY!!!

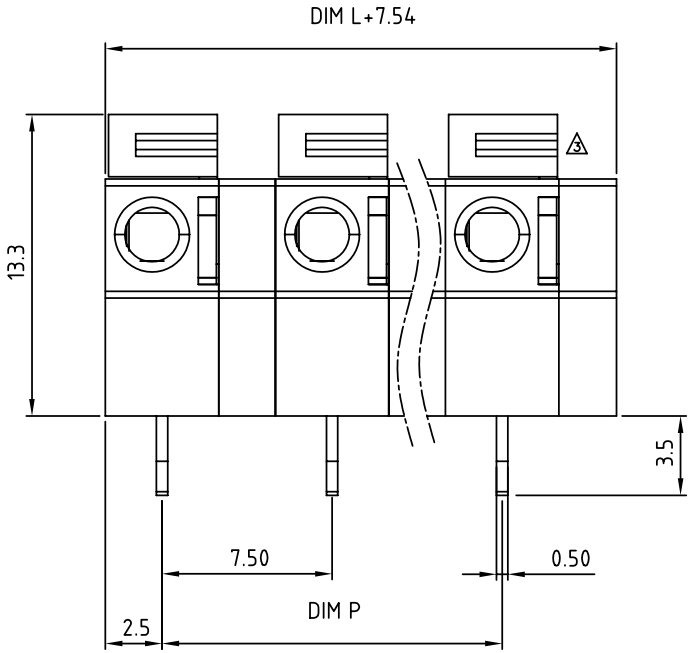

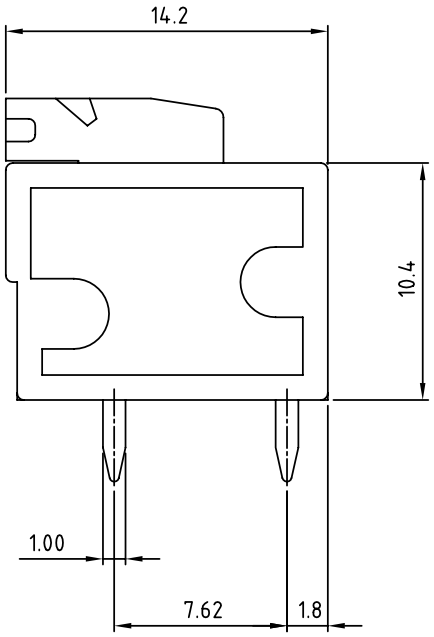

N=Number of contacts

Material

- Terminal body (Contact pin): Brass
- Wire guard: Stainless steel
- Surface of solder tail: Tin plated
- Insulator (housing): Thermoplastic (UL94V-0)

1 Electrical cULus/VDE

- Voltage rating: 300VAC/450VAC
- Current rating: 10A/10A
- Wire range: 0.75-1.5mm²
- Solid wire(AWG): 14-24
- Stranded wire(AWG): 14-24
- Pull force:
- Screw:
- Wire strip length: 9-10mm
- Withstanding Voltage: 1.6KV/2.5KV
- Operating temperature: -40°C to +115°C
- 2 Soldering temperature: 250°C±10°C/5 Sec
- Safety Approval:

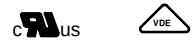

HA xx 61 x 0 xxxx G

- xx: 02 2 CONTACTS; 03 3 CONTACTS; ... ...; 16 16 CONTACTS
- x: 2 Red; 3 Orange; 5 Green(RAL6018/T); 8 Grey(RAL7004/P)
- xxxx: 0000: "@" Logo (Standard); 000A: "ANYTEK" Mark; Any special item by customer requst. please contact sales department.
- G: Pb<40,000ppm

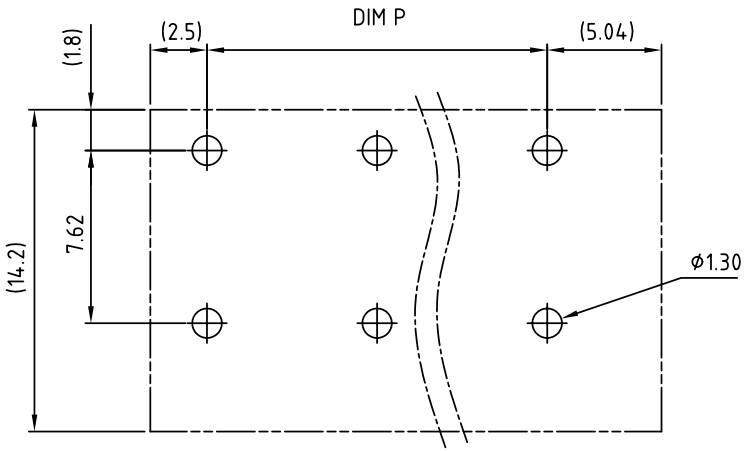

P.C.B. LAYOUT

N = Number of poles
Dim L=(N-1)x7.5
Dim P=(N-1)x7.5

	Dim L	Dim P
2-6p	±0.15	±0.10
7-12p	±0.20	±0.20
13-18p	±0.30	±0.25
19-24p	±0.40	±0.30

ANYTEK

CUSTOMER COPY

ALL RIGHTS RESERVED. REPRODUCTION OR ISSUE TO THIRD PARTIES IN ANY FORM WHATEVER IS NOT PERMITTED WITHOUT WRITTEN AUTHORITY FROM THE PROPRIETOR. PROPERTY OF ANYTEK TECHNOLOGY CO., LTD

TITLE	HA-7.5mm 180° Series				
PART NO.	HAxx61x0xxxxG			DWG NO.	8HA0302
APPROVED	CHECKED	DESIGNED	DRAWN	CUST NO.	
			Chen Bo 2010.08.12	UNIT: mm	
				SCALE: NONE	
				SHEET: 01/01	REV.: E

Tolerance	
X.	±0.50
X.X	±0.30
X.XX	±0.10
X°	±1°