DIALIGHT PART NUMBER	PACKAGING	POSITION 1	POSITION 2	MSL
592-1010-302F	SAMPLE STRIP	RED	RED	2
592-1010-313F	13" REEL			
592-1313-302F	SAMPLE STRIP	GREEN	GREEN	2
592-1313-313F	13" REEL			
592-1314-302F	SAMPLE STRIP	GREEN	YELLOW	2
592-1314-313F	13" REEL			
592-1414-302F	SAMPLE STRIP	YELLOW	YELLOW	2
592-1414-313F	13" REEL			
592-1515-302F	SAMPLE STRIP	ORANGE	ORANGE	2
592-1515-313F	13" REEL			

REV	ECN NO	REVISIONS	DRN	CKD	APP	DATE
A	———	NEW RELEASE	JTD	MES	NO	1-27-12

SAMPLE STRIP
PACKAGING SPECIFICATION

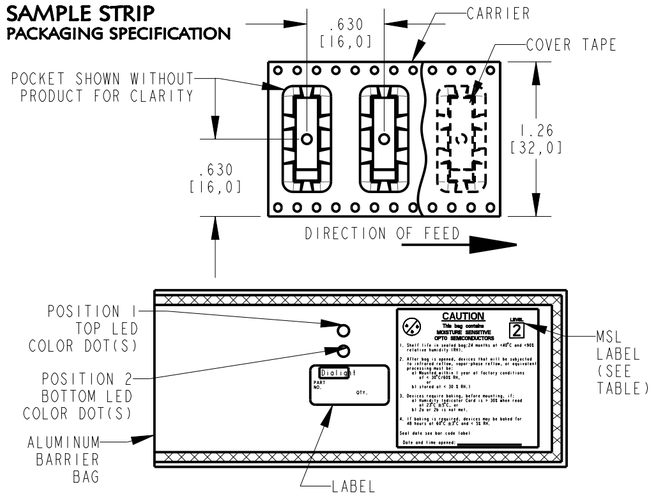

* 10 PCS. SAMPLE STRIP.
* STRIP PLACED IN ALUMINUM BARRIER BAG.
* LABEL TO INCLUDE P/N, QTY PER BAG, MFG DATE LED LOT NO., LED COLOR, LED BIN INTENSITY FOR BOTH LEDS AND "COUNTRY OF ORIGIN: MEXICO".

13" REEL
PACKAGING SPECIFICATION

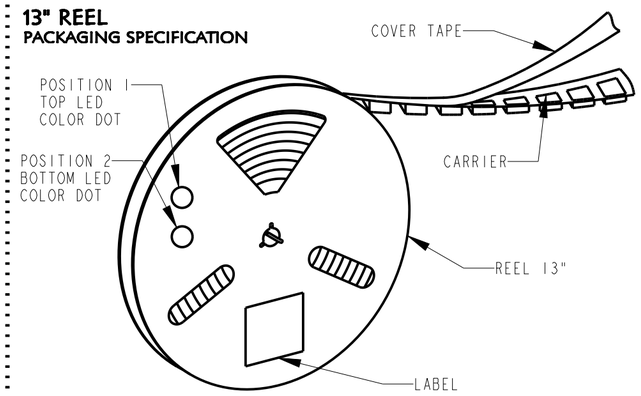

* 13" REEL PER EIA STANDARD 481-2
* QUANTITY = 300 Pcs/REEL IN VACUUM SEALED BAG
* LABEL AND COLOR DOTS ON REEL AND ON BAG
* LABEL TO INCLUDE P/N, QTY PER BAG, MFG DATE LED LOT NO., LED COLOR, LED BIN INTENSITY FOR BOTH LEDS AND "COUNTRY OF ORIGIN: MEXICO". CORNER OF LABEL ON REEL INDICATES MOISTURE SENSITIVITY LEVEL. ALUMINUM BARRIER BAG INCLUDES MSL LABEL.

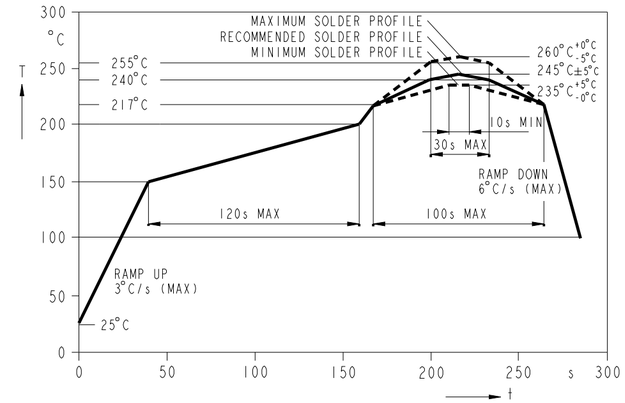

RECOMMENDED RoHS COMPLIANT REFLOW PROFILE

OPERATING CHARACTERISTICS AT 25°C AMBIENT - SINGLE COLOR LEDs

COLOR		LUMINOUS INTENSITY (mcd)		DOMINANT WAVELENGTH (nm)			PEAK WAVELENGTH (nm)	FORWARD VOLTAGE (V)		REVERSE CURRENT (μA)
		2mA	10mA					2mA		
#	DESCRIPTION	TYP		MIN	TYP	MAX	TYP	TYP	MAX	MAX
10	RED	3.8	9.8	624	630	636	643	1.8	2.2	10 @ V_R=12 V
13	GREEN	3.2	10.1	566	570	575	572	1.8	2.2	10 @ V_R=12 V
14	YELLOW	4.4	11.3	580	587	594	591	1.8	2.2	10 @ V_R=12 V
15	ORANGE	5.6	14.0	600	606	609	610	1.8	2.2	10 @ V_R=12 V

ABSOLUTE MAXIMUM RATINGS AT 25°C AMBIENT - SINGLE COLOR LEDs	COLOR				UNITS
	RED	GREEN	YELLOW	ORANGE	
POWER DISSIPATION	50	40	50	50	mW
PEAK FORWARD CURRENT (1/200 DUTY CYCLE, 10μs PULSE WIDTH)	100				mA
CONTINUOUS FORWARD CURRENT	20				mA
LINEAR DERATING AT MAX CURRENT (20mA)	0 (UNDER 100°C)				mA/°C
REVERSE VOLTAGE	12				V
LEAD REFLOW SOLDERING TEMPERATURE (FOR 5 SEC.)	260 (ALSO SEE GRAPH)				°C
OPERATING TEMPERATURE	-40 TO +100				°C
STORAGE TEMPERATURE	-40 TO +100				°C

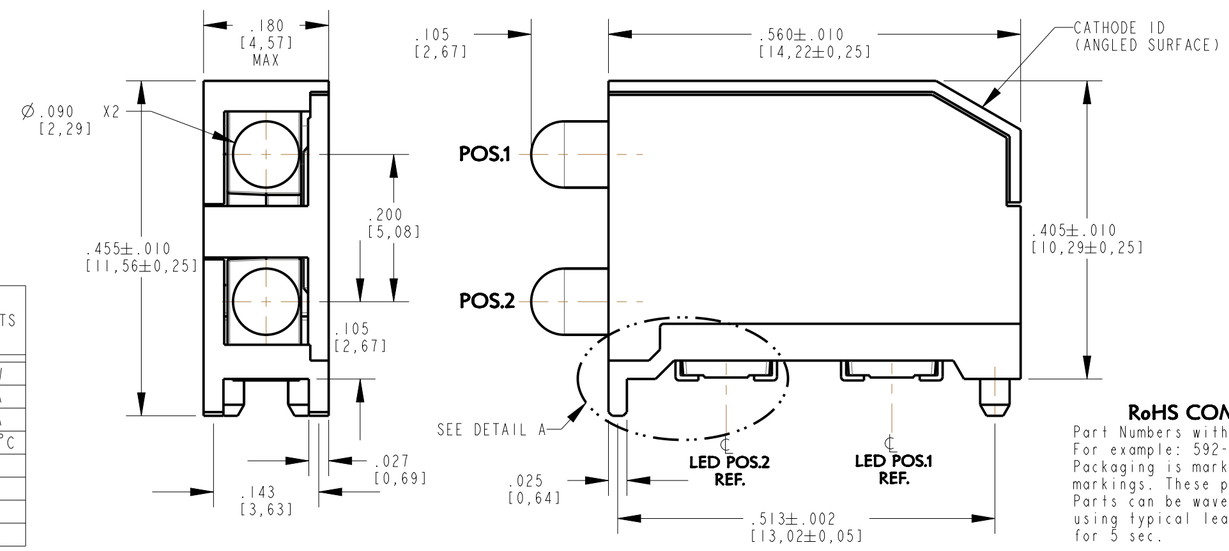

RoHS COMPLIANT 592-XXXX-3XXF

Part Numbers with the "F" suffix ending are RoHS Compliant. For example: 592-1010-302F
Packaging is marked with "RoHS Compliant" label or equivalent markings. These parts can be used with RoHS reflow profile. Parts can be wave soldered, dip soldered or hand soldered using typical lead-free soldering process with max 260°C temp. for 5 sec.

ATTENTION:
OBSERVE PRECAUTIONS FOR HANDLING ELECTROSTATIC SENSITIVE DEVICES

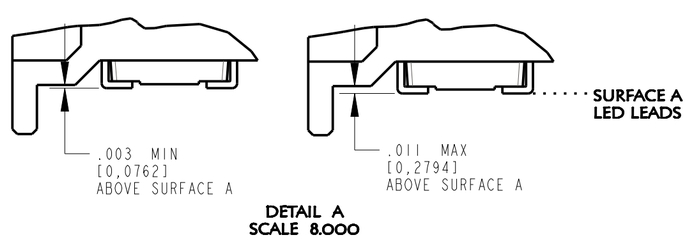

DETAIL A
SCALE 8.000

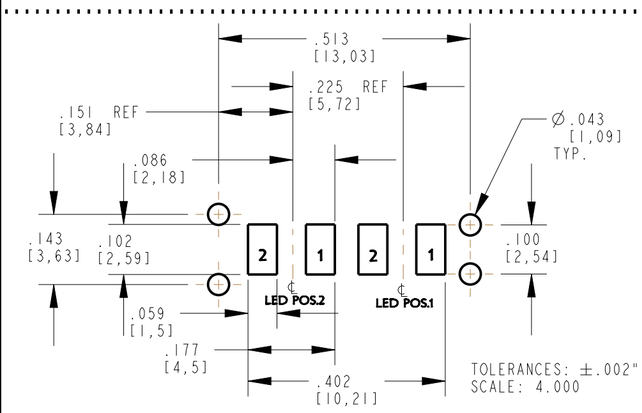

LED COLOR	PIN 1	PIN 2
SINGLE COLOR	CATHODE	ANODE

RECOMMENDED PAD LAYOUT - SINGLE COLOR

NOTES :

1. DIALIGHT PART NUMBERS: 592-XXXX-3XXF.
2. ...-302F SUFFIX MEANS PARTS ARE SUPPLIED ON A 10 PCS. SAMPLE STRIP
   ...-313F SUFFIX MEANS PARTS ARE SUPPLIED ON A 13 INCH REEL, 300 pcs/REEL
3. FRONT AND REAR TERMINALS [OF EACH LED] OF THE ASSEMBLY TO BE WITHIN .005" COPLANARITY.
4. STORAGE CONDITIONS FOR TAPED PRODUCT: RE-TAPING MAY BE NECESSARY FOR PRODUCT STORED MORE THAN TWELVE MONTHS.
5. PIN NUMBERS ARE FOR REFERENCE ONLY , DESIGNATION NON-EXISTENT ON PART.
6. MOISTURE SENSITIVITY LEVEL LABEL WILL BE PLACED ON BAG. CHECK CHART FOR PROPER LEVEL.
7. THIS ASSEMBLY CONTAINS ELECTROSTATIC DISCHARGE SENSITIVE DEVICES (ESDS). MAINTAIN ALL PRECAUTIONARY MEASURES DURING ASSEMBLY, HANDLING, AND STORAGE IN ACCORDANCE WITH IPC-A-610.

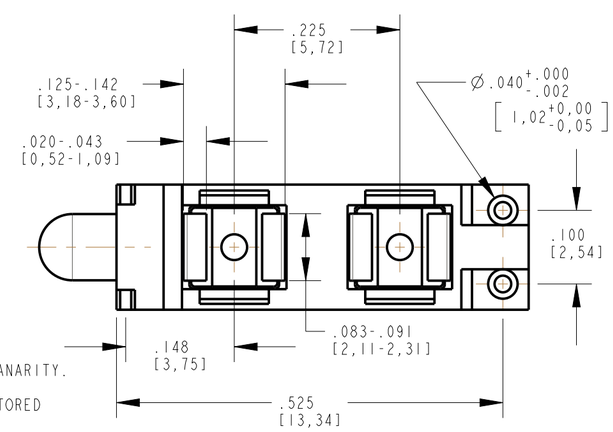

++SINGLE COLOR LED ASSEMBLY++

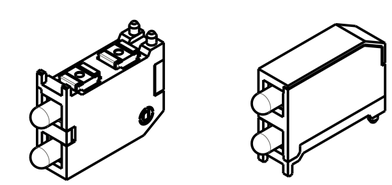

SCALE 2.000

THIS DRAWING AND THE CONTENTS HEREIN ARE CONFIDENTIAL AND THE SOLE PROPERTY OF DIALIGHT. REPRODUCTION OF THIS DRAWING OR CONSTRUCTION OF ANY PARTS WITHIN THIS DRAWING ARE FORBIDDEN WITHOUT THE WRITTEN CONSENT OF DIALIGHT.

SCALE: 2.000	DRAWING NUMBER C-17954	REV A
ALL DIM'S IN: INCHES (MM)		
TOLERANCES: UNLESS OTHERWISE SPECIFIED FRACTIONS: ±1/64 DECIMALS (.XX): ±.01 DECIMALS (.XXX): ±.005 DECIMALS (.XXXX): ±.0005 ANGLES: ±1°	TITLE BI-LEVEL PRISM RoHS COMPLIANT	
	MATERIAL	
FINISH:	Dialight	1501 ROUTE 34 SOUTH FARMINGDALE, NJ 07727
FSCM 83330	SHEET 1 OF 1	FAMILY TABLE: