THIS DRAWING IS UNPUBLISHED. RELEASED FOR PUBLICATION -,- .
© COPYRIGHT - By - ALL RIGHTS RESERVED.

LOC	DIST
GP	00

REVISIONS

P	LTR	DESCRIPTION	DATE	DWN	APVD
	A1	REVISED PER ECO-11-004835	11MAR11	RK	HMR

1. HOUSING: BLACK POLYESTER, UL 94V-0 RATED
CONTACTS: PHOSPHOR BRONZE
SHELL: CARBON STEEL
SCREWLOCKS: ZINC
INSERTS: BRASS

2. SHELL: 5.08μm[.000200] MIN TIN OVER 2.54μm[.000100] MIN COPPER.
CONTACTS: SEE TABLE
INSERTS: UNPLATED.
SCREWLOCKS: CLEAR CHROMATE.

3. GOLD FLASH FOR A LENGTH OF 2.54 [.100] MIN FROM MATING END, 2.54μm[.000100] MIN TIN ON OPPOSITE END, BOTH OVER 1.27μm[.000050] MIN NICKEL.

4. 0.76μm[.000030] MIN GOLD FOR A LENGTH OF 2.54 [.100] MIN FROM MATING END, 2.54μm[.000100] MIN TIN ON OPPOSITE END, BOTH OVER 1.27μm[.000050] MIN NICKEL.

5. DATUMS AND BASIC DIMENSIONS ESTABLISHED BY CUSTOMERS.

6. 2.79 [.110] MAX IN SHELL TAB CLINCH AREAS.

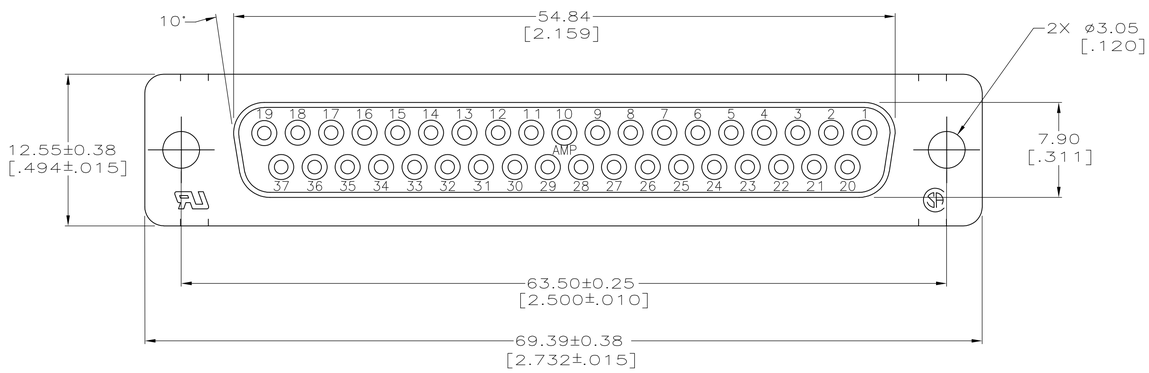

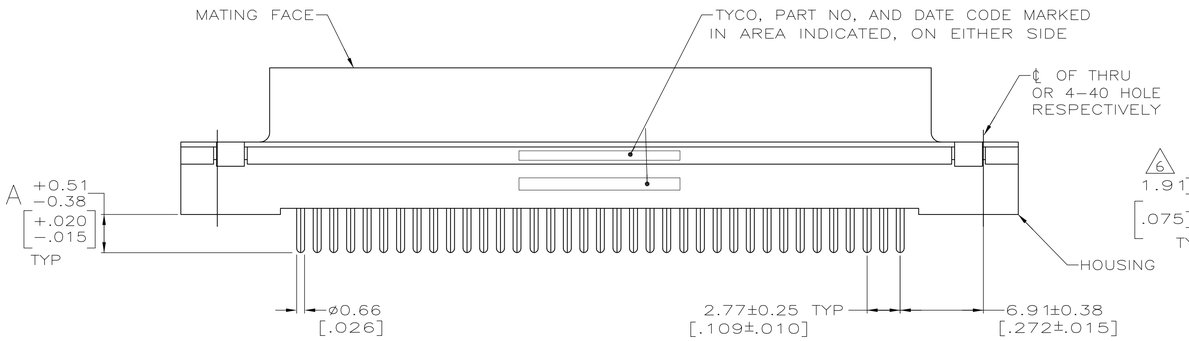

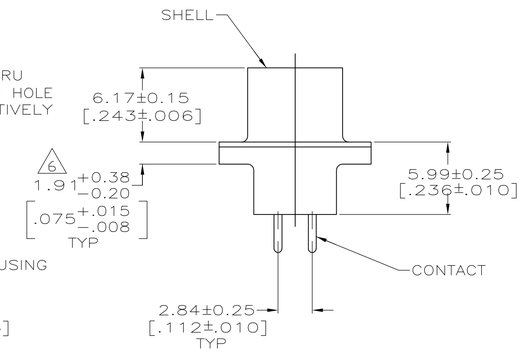

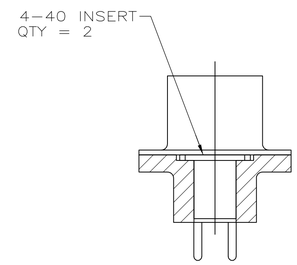

DETAIL D

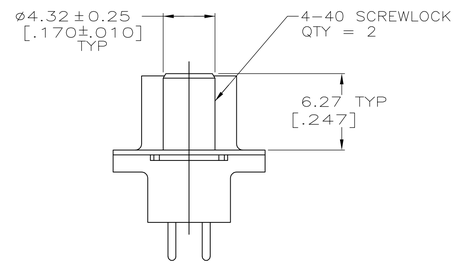

DETAIL E

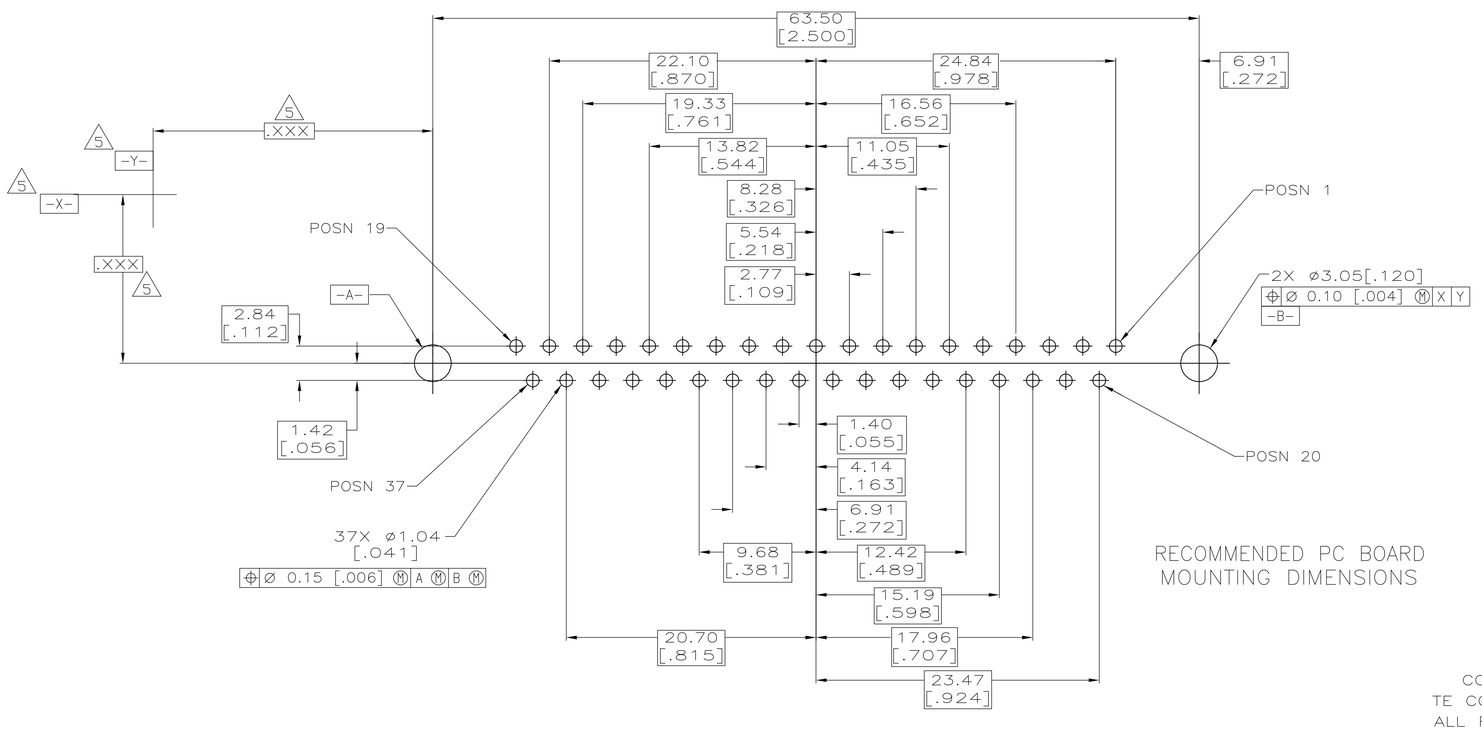

RECOMMENDED PC BOARD
MOUNTING DIMENSIONS

A	MOUNTING HARDWARE	CONTACT FINISH	PART NO
4.32 [.170]	4-40 SCREWLOCK (DETAIL E)	4	1-5747301-6
3.18 [.125]	4-40 SCREWLOCK (DETAIL E)	4	1-5747301-4
3.18 [.125]	4-40 INSERT (DETAIL D)	4	5747301-8
3.18 [.125]	4-40 INSERT (DETAIL D)	3	5747301-7
3.18 [.125]	–	4	5747301-2

COPYRIGHT 2005
TE CONNECTIVITY CORP
ALL RIGHTS RESERVED

THIS DRAWING IS A CONTROLLED DOCUMENT.

DIMENSIONS: mm[INCHES]

TOLERANCES UNLESS OTHERWISE SPECIFIED:
0 PLC ± –
1 PLC ± –
2 PLC ± 0.13 [.005]
3 PLC ± –
4 PLC ± –
ANGLES ± –

MATERIAL 1 FINISH 2

DWN B. LATTUCA 22SEPT05
CHK S. BOLASH 22SEPT05
APVD M. WALMSLEY 22SEPT05
PRODUCT SPEC 108-40025
APPLICATION SPEC 114-40023
WEIGHT –

TE Connectivity

NAME RECEPTACLE ASSEMBLY, SIZE 4, 37 POSN, VERTICAL, FRONT METAL SHELL, AMPLIMITE HD-20

SIZE	CAGE CODE	DRAWING NO	RESTRICTED TO
A1	00779	C-5747301	–

CUSTOMER DRAWING SCALE 4:1 SHEET 1 OF 1 REV A1

4805 (3/11)