Alle Rechte vorbehalten/ *All rights reserved*

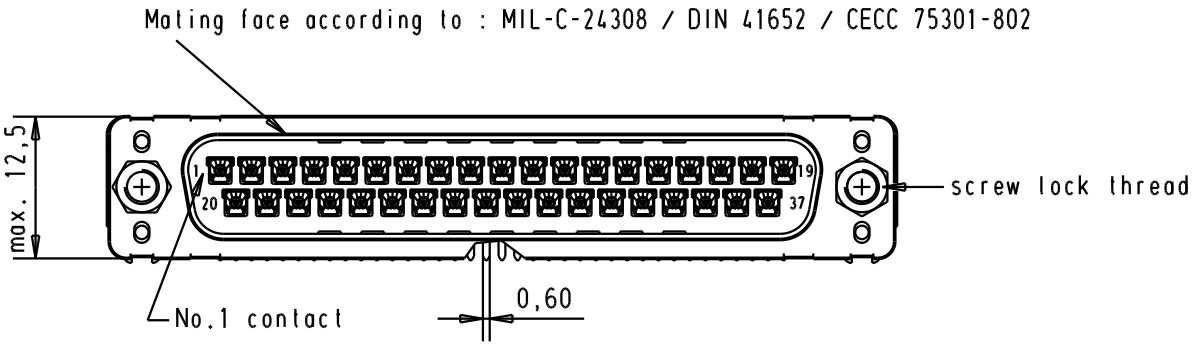


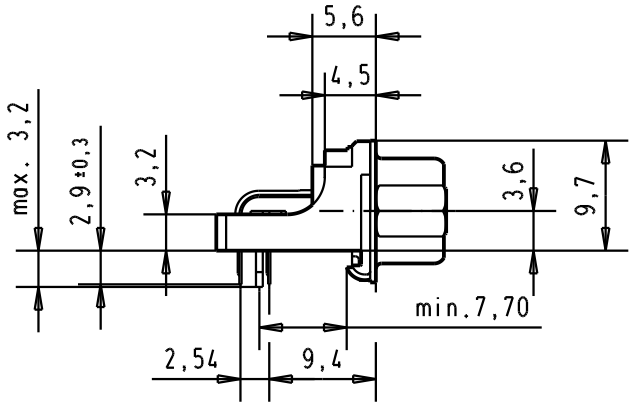


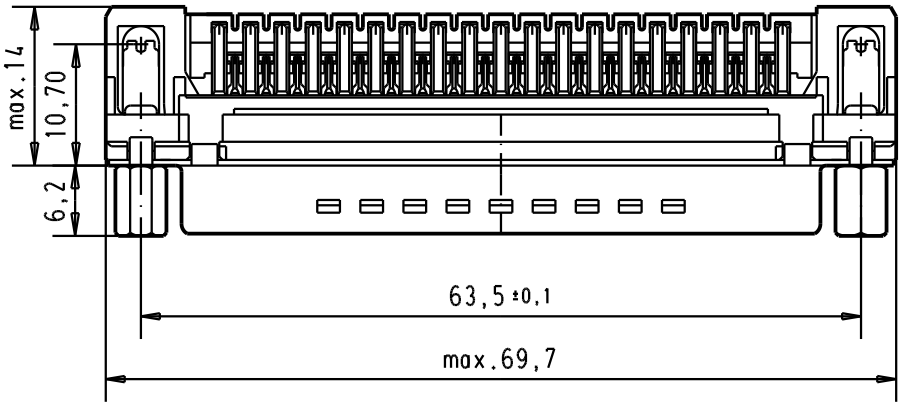


PCB layout hole
component side

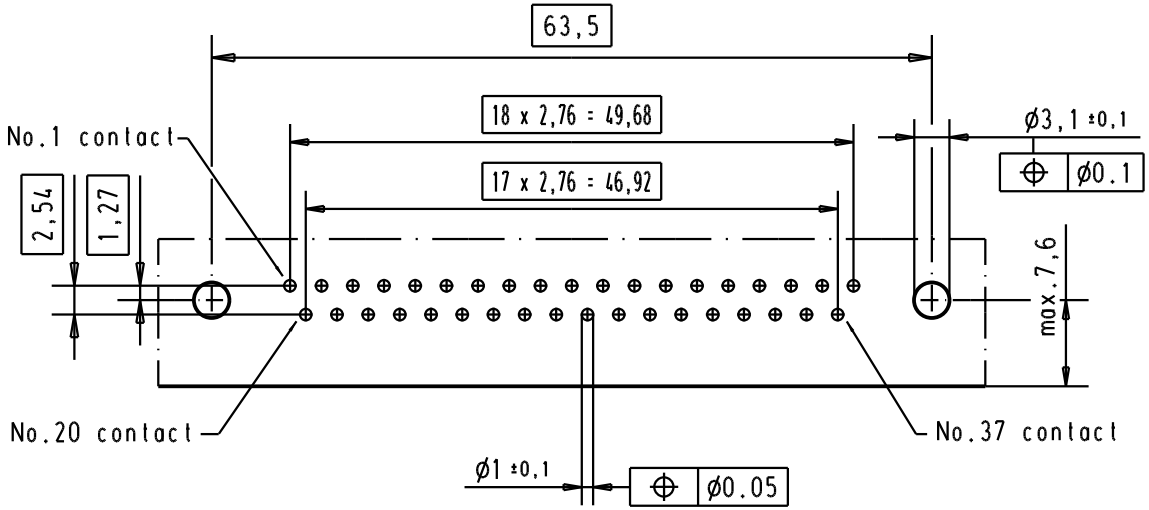


Connector retention and assembling forces on the PCB = 25 / 80 newtons

| Part number | Screw lock thread | Performance level | Mod. | Dat. | Name |
|---|---|---|---|---|---|
| | | | | | |
| | | | | | |
| | | | 31892 | 22/04/04 | JH |
| 09 65 462 3817 | 4-40 UNC | 1 | 31084 | 04/SEP/02 | YT |
| 09 65 462 6817 | 4-40 UNC | 2 | 29689 | 03/07/01 | AA |
| 09 65 462 7817 | 4-40 UNC | 3 | 27960 | 18/dec/00 | ALSPACE |

| | Dat. | Name |
|---|---|---|
| Detail. | 18/dec/00 | ALSPCE |
| Insp. | | |
| Stand. | | |

All Dim. in mm
Orig. Size DIN A 4

D-Sub, low profil angle,
37 poles, with solder pin,
screw lock, grounding board lock.

Maßstab/ *Scale* 1.5:1

HARTING EURL
F-95972 Paris

TB 0965462x81x

Sub.

Blatt/ *Page* 3