THIS DRAWING IS UNPUBLISHED. RELEASED FOR PUBLICATION -,- .
© COPYRIGHT 2011 BY TYCO ELECTRONICS CORPORATION. ALL RIGHTS RESERVED.

LOC	DIST
DW	—

REVISIONS

P	LTR	DESCRIPTION	DATE	DWN	APVD
	B	REVISED (ECO-11-013077)	23JUN'11	J.C.	W.K.

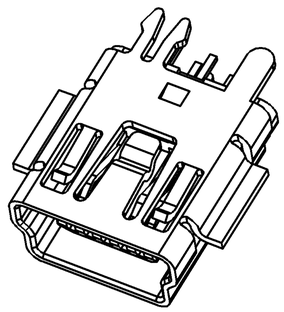

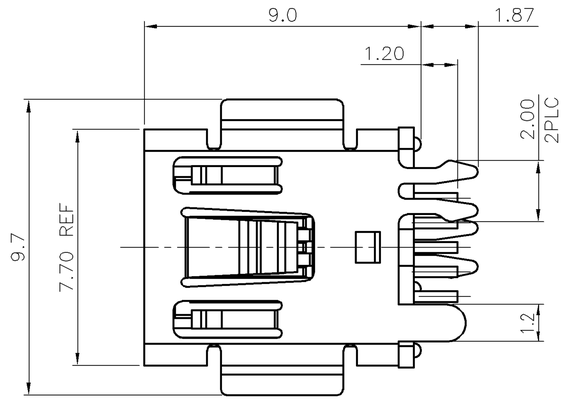

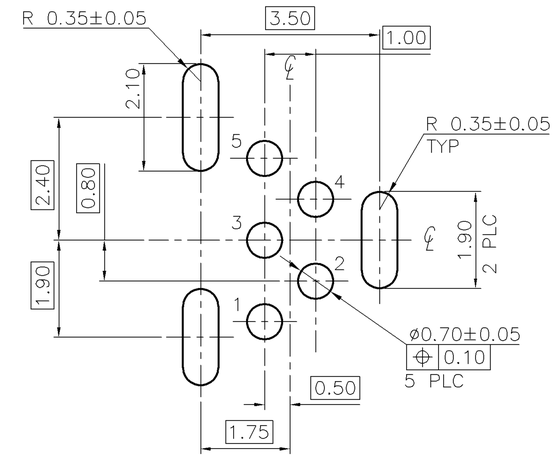

RECOMMENDED PCB LAYOUT (TOP VIEW)

(DIMENSION TOLERANCE: 1 PLC: ±0.1 2PLC: ±0.05)

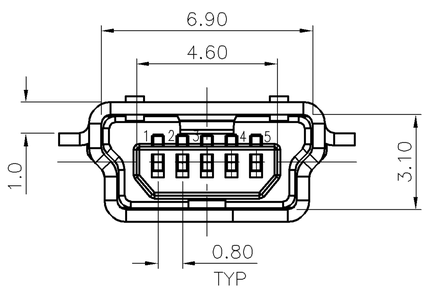

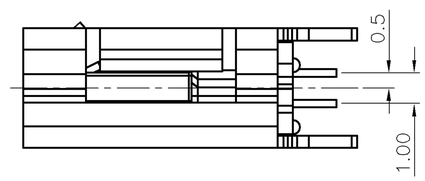

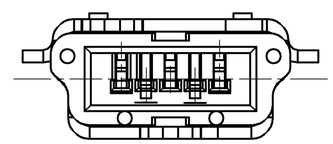

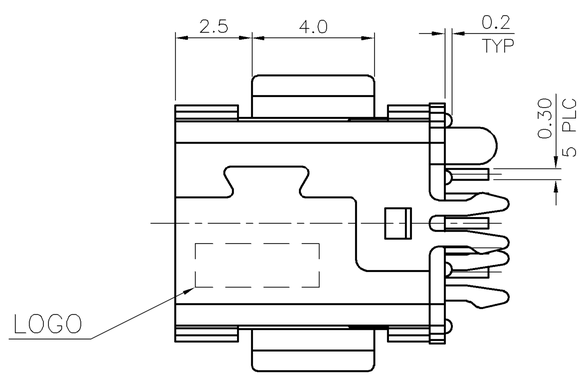

NOTE:
1. MATERIAL:
   HOUSING: THERMOPLASTIC, UL 94V-0, COLOR: BLACK.
   CONTACT: PHOSPHOR BRONZE, THICKNESS=0.25mm.
   SHELL: PHOSPHOR BRONZE, THICKNESS=0.40mm.
2. FINISH:
   CONTACT: GOLD FLASH OVER
   30u" MIN. PALLADIUM-NICKEL PLATED ON CONTACT AREA,
   100u" MIN. MATTE-TIN ON SOLDER TAILS,
   50u" MIN. NICKEL UNDERPLATED ALL OVER.
   SHELL: 100u" MIN. BRIGHT TIN OVER 50u" MIN. Cu UNDERPLATED.
3. RECOMMENDED PCB THICKNESS : 0.8mm.
4. NET WEIGHT : 0.798 gram.
5. RoHS 2002/95/EC COMPLIANT
6. WAVE SOLDER CAPABLE TO 240°C PER TE SPEC 109-202, CONDITION A.

1775060-1
PART NUMBER

THIS DRAWING IS A CONTROLLED DOCUMENT.

DIMENSIONS: mm

TOLERANCES UNLESS OTHERWISE SPECIFIED:

0 PLC	± 0.50
1 PLC	± 0.38
2 PLC	± 0.25
3 PLC	± 0.10
4 PLC	± –
ANGLES	± 3°

MATERIAL: SEE NOTE

FINISH: SEE NOTE

DWN	O. HU	11MAR2005
CHK	S. HOU	11MAR2005
APVD	W.J. KE	11MAR2005

PRODUCT SPEC: 108-57509

APPLICATION SPEC: —

WEIGHT: —

CUSTOMER DRAWING

TE Connectivity

NAME: MINI USB CONN., RCPT, V/T, DIP, B TYPE

SIZE	CAGE CODE	DRAWING NO	RESTRICTED TO
A3	00779	C-1775060	—

SCALE	SHEET	REV
—	1 OF 2	B

THIS DRAWING IS UNPUBLISHED. RELEASED FOR PUBLICATION -,- .
© COPYRIGHT 2011 BY TYCO ELECTRONICS CORPORATION. ALL RIGHTS RESERVED.

LOC	DIST
DW	—

REVISIONS

P	LTR	DESCRIPTION	DATE	DWN	APVD
		SEE SHEET 1.			

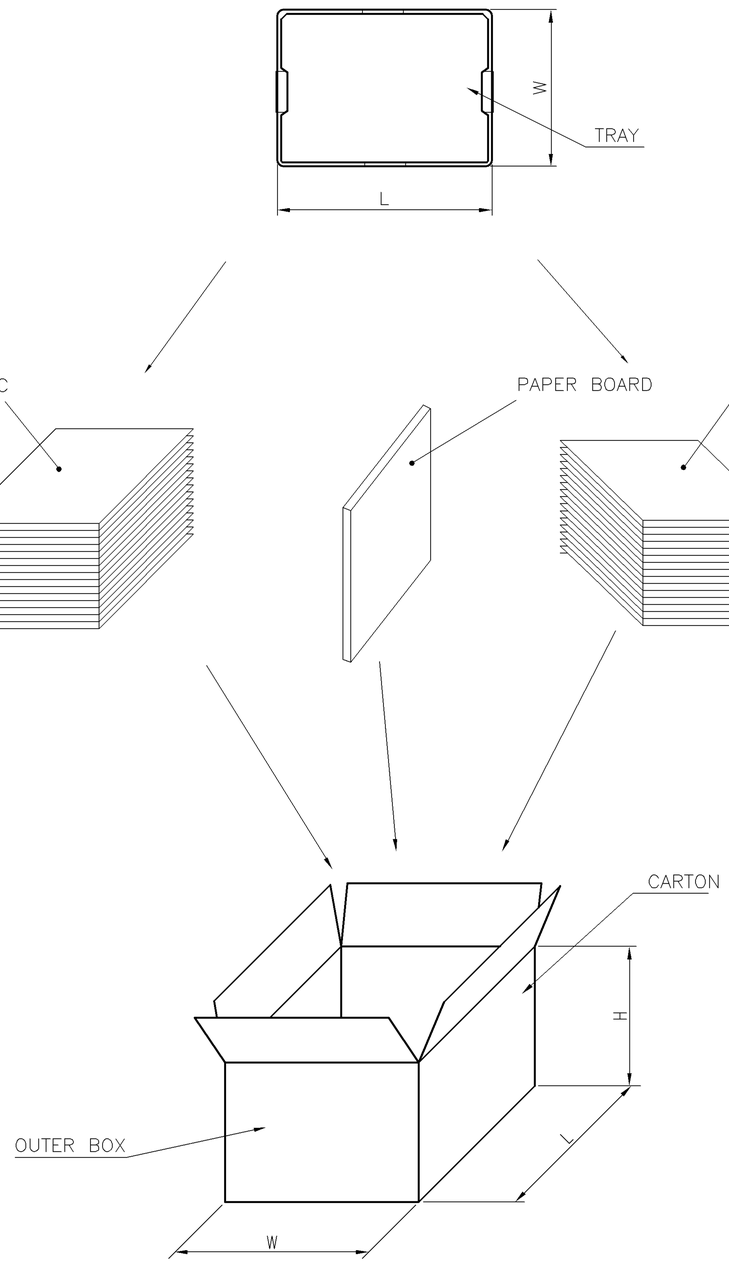

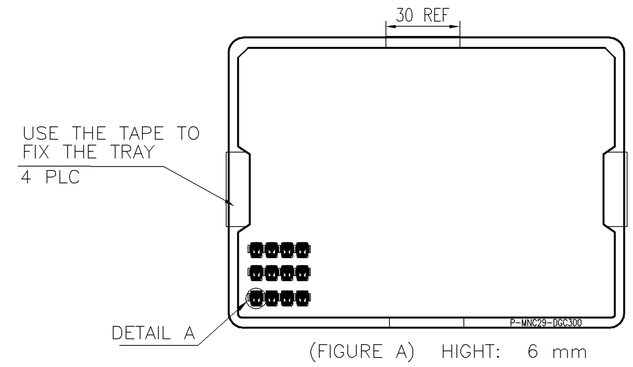

(FIGURE A) HIGHT: 6 mm

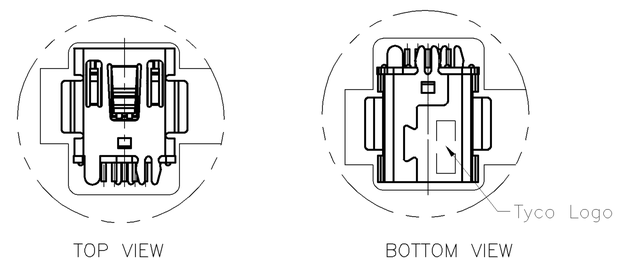

TOP VIEW BOTTOM VIEW

DETAIL A

NOTE:
1. MATERIAL:
   TRAY : PVC.
   SHIPPING CARTON : CORRUGATED FIBERBOARD.
2. DIMENSION:
   TRAY : L=230, W=160, H=6mm.
   SHIPPING CARTON : L=340, W=245, H=230mm.
3. QUANTITY:
   PRIMARY PACKING : 150 PCS/TRAY.
   SECONARY PACKING : 76 TRAY/CARTON(11,400PCS).
4. WEIGHT:
   NET WEIGHT : 9.1kg.
   GROSS WEIGHT : 12.6kg.

THIS DRAWING IS A CONTROLLED DOCUMENT.

DIMENSIONS: mm

TOLERANCES UNLESS OTHERWISE SPECIFIED:

0 PLC	± –
1 PLC	± –
2 PLC	± –
3 PLC	± –
4 PLC	± –
ANGLES	± –

MATERIAL –

FINISH –

DWN –
CHK –
APVD –
PRODUCT SPEC —
APPLICATION SPEC —
WEIGHT —

TE Connectivity

NAME
MINI USB CONN., RCPT, V/T, DIP, B TYPE

SIZE	CAGE CODE	DRAWING NO	RESTRICTED TO
A3	00779	C-1775060	—

CUSTOMER DRAWING | SCALE — | SHEET 2 OF 2 | REV B