SIGN	DATE	DESCRIPTION	APPROVER
1	01/27'07	The Soldering temperature from 245° to 250°	Aaron
2	10/09'12	Update the drawing	Da cheng
3	04/18'13	Update the drawing	Da cheng
THIS IS CAD DRAWING, DO NOT REVISE MANUALLY!!!			

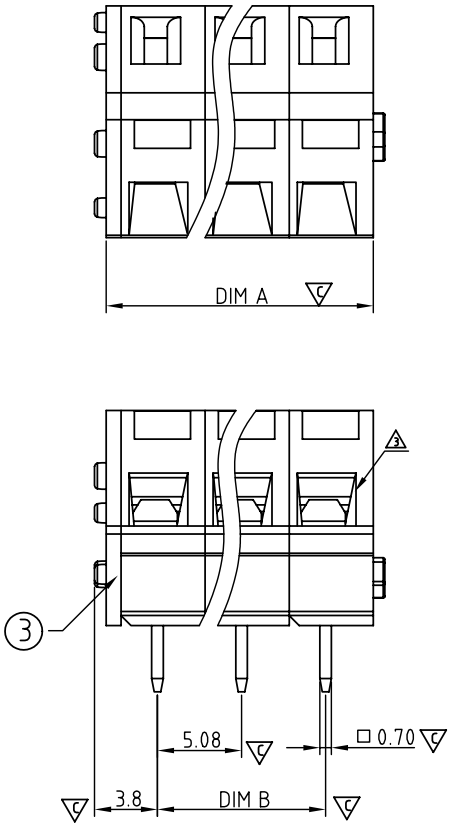

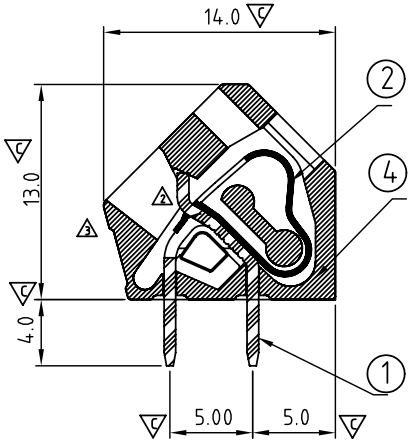

Material

- Item ① Terminal body (Contact pin): Brass,Tin plated
- Item ② Spring clamp: Stainless steel
- Item ③ Terminal Cover: Thermoplastic (UL94V-0)
- Item ④ Terminal Body: Thermoplastic (UL94V-0)

Electrical

- Voltage rating: 300V
- Current rating: 15A
- Wire range:
- Solid wire(AWG): 12-28
- Stranded wire(AWG): 12-28
- 2 Wire strip length: 5-6mm
- Withstanding Voltage: 1.6KV
- 2 Operating temperature: -40°C to +115°C
- 2 2 Soldering temperature: 260°C±5°C/5 Sec
- 2 Safety Approval: c UL us
- 2 Critical dimension: ▽C

HG xx 30 x 0 xxxx G

Poles
01 1Contacts
02 2Contacts
, ,
24 24Contacts

3 2 Color
0 Black (RAL9005)
2 Red (RAL3001/D)
3 Orange(RAL2011/P)
4 Yellow(RAL1018/A)
5 Green(RAL6018/T)
6 Blue (RAL5015/A)
8 Grey(RAL7004/P)
9 White(RAL1102)
C Multiple colors

0000 Standard @ Logo
000A Standard ANY Logo
Any special item by customer request, please contact sales department.

RoHS compliant (lead<4%) 2
In copper Alloy

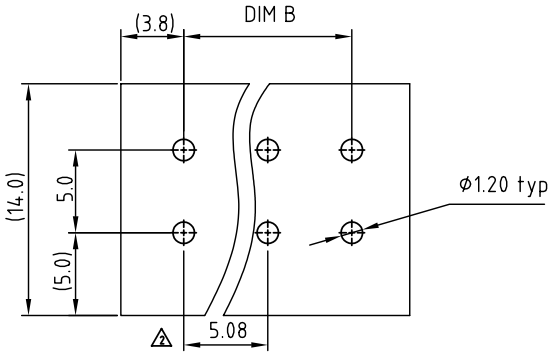

2 P.C.B. LAYOUT
Bottom view

2 Dimension

DIM A	Nx5.08+0.9
DIM B	(N-1)×5.08

2 N=Number of poles

POLES	DIM B	DIM A
3 1P		±0.10
2p-6p	±0.15	±0.20
7p-12p	±0.20	±0.25
13p-18p	±0.25	±0.30
19p-24p	±0.35	±0.40

ANYTEK

CUSTOMER COPY

ALL RIGHTS RESERVED. REPRODUCTION OR ISSUE TO THIRD PARTIES IN ANY FORM WHATEVER IS NOT PERMITTED WITHOUT WRITTEN AUTHORITY FROM THE PROPRIETOR. PROPERTY OF ANYTEK TECHNOLOGY CO., LTD

TITLE	HG 5.08mm Series				
PART NO.	HGxx30x0xxxxG			DWG NO.	8HG0101
APPROVED	CHECKED	DESIGNED	DRAWN	CUST NO.	
		Da cheng 2013.04.18	Da cheng 2013.04.18	SHEET: 01/01	UNIT: mm SCALE: NONE REV.: F

Tolerance	
X.	±0.50
X.X	±0.30
X.XX	±0.10
X°	±1°