THIS DRAWING IS UNPUBLISHED. RELEASED FOR PUBLICATION .1997
© COPYRIGHT 1997. BY TYCO ELECTRONICS CORPORATION. ALL RIGHTS RESERVED.

LOC	DIST
A1	-

REVISIONS

P	LTR	DESCRIPTION	DATE	DWN	APVD
	A5	Released as per ECR-08-004369	20.02.2008	SP	TS
	A6	ECR-17-014011	28MAR18	SG	MKO

~~PN 1-6 & 2-6~~

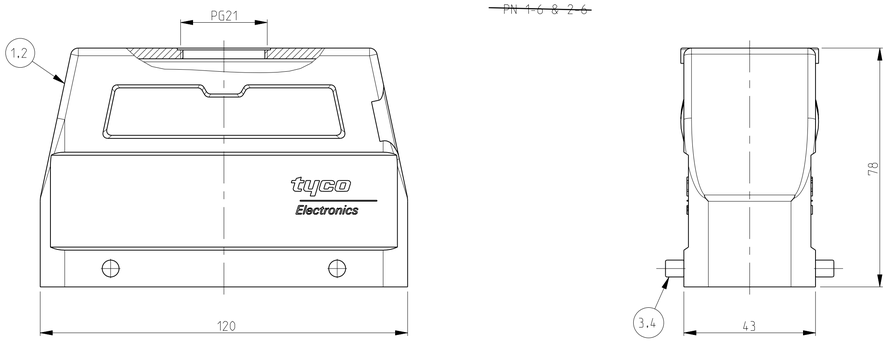

~~PN 1-1~~

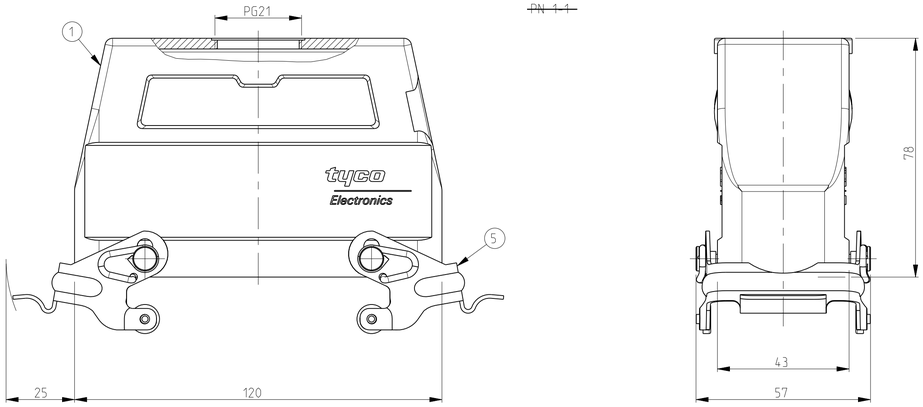

PN 1-7

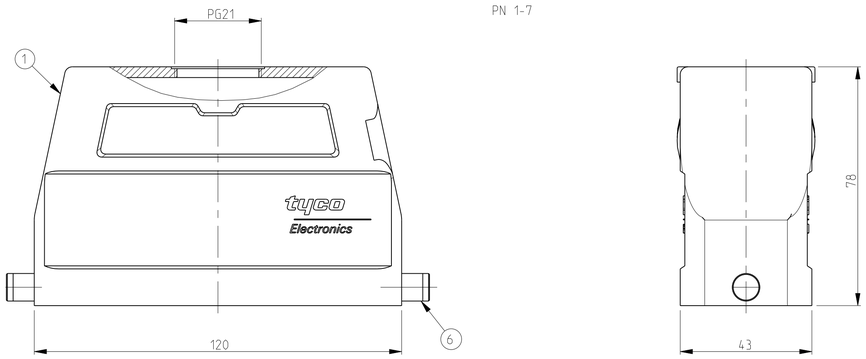

NOTES.

1 Material:Housing:Aluminium Diecasting Alloy
Seals:Neoprene

2 Surface-Powder Varnish Grey
-Aluminium Oxide +
Varnish Black

3 Varnish on the inside not necessary

4 Packaging
Quantity 5 Pieces in a box

~~PN 1-6 & 2-6~~

SCALE 1:2

~~PN 1-1~~

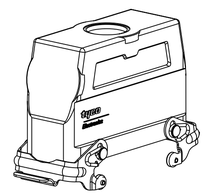

SCALE 1:2

PN 1-7

SCALE 1:2

OBSOLETE	OBSOLETE			OBSOLETE								
1								Hood HD.64.Pg2.21	Aluminium	-	Grey	8
	1							ZB-Central clip	Steel	Zinc plated	Blue	7
2		2						LB-Clip bolt	Steel	Zinc plated	Blue	6
				2				VS-Side clip	Steel	Zinc plated	Blue	5
						4		VS-Clip bolt	Stainless steel	-	-	4
							4	VS-Clip bolt	Steel	Zinc plated	Blue	3
						1		Hood HD.64.Pg1.21	Aluminium	Aluminium oxide	Black	2
		1	1	1			1	Hood HD.64.Pg1.21	Aluminium	-	Grey	1
3-0	1-3	1-7	1-1	2-6	1-6			DESCRIPTION	MATERIAL	SURFACE	COLOR	ITEM NO	REMARKS

ORDERING TEXT

HD.64.Sto.1.21.G
HD-K.64.Sto.1.21.G
HD.64.Sto-VS.1.21.G
HD.64.Sto-GR.1.21.G
HD-Z.64.Sto-ZB.1.21.G
HD.64.Sto-GR.2.21.G SO

THIS DRAWING IS A CONTROLLED DOCUMENT FOR TYCO ELECTRONICS CORPORATION
IT IS SUBJECT TO CHANGE AND THE CONTROLLING ENGINEERING ORGANIZATION
SHOULD BE CONTACTED FOR THE LATEST REVISION.

DIMENSIONS: mm

TOLERANCES UNLESS OTHERWISE SPECIFIED:
A:ISO 9692
B:ISO 2768-mK
0 PLCN 9001-03
1 PLC ±
2 PLC ±
3 PLC ±
4 PLC ±
ANGLES ±

MATERIAL -

FINISH -

DWN	09.12.98	TE Connectivity
Schneider		
CHK	09.12.98	
Schweiger		
APVD	-	NAME: Hood HD.64.Sto.1.21.G
PRODUCT SPEC	108-74001 108-74003	
APPLICATION SPEC	114-74001 114-74004	
WEIGHT		SIZE: A1 · CAGE CODE: 00779 · DRAWING NO: C-1103341 · RESTRICTED TO: -
CUSTOMER DRAWING		SCALE 1:1 · SHEET 1 OF 1 · REV A6