REV.	DATE	DESCRIPTION
NC	04/11/02	INITIAL RELEASE

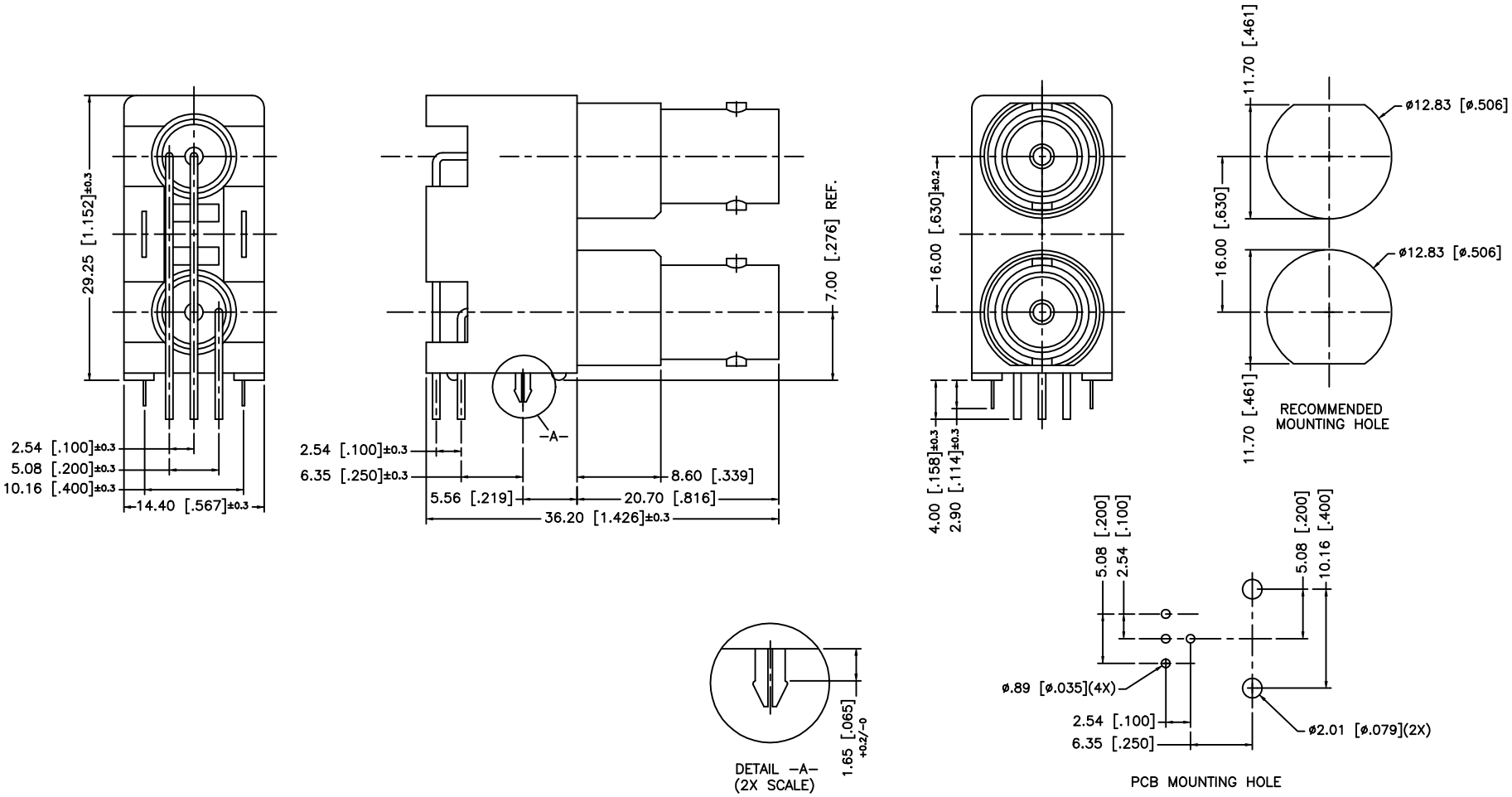

8	MNTING POST	BRASS	BRT. TIN
7	POST	COPPER	BRT. TIN
6	POST	COPPER	BRT. TIN
5	HOUSING	PBT	WHITE
4	CONTACT PIN	BER. COPPER	BRT. TIN
3	CONTACT PIN	BER. COPPER	BRT. TIN
2	INSULATOR	POLY PRO	NATURAL
1	BODY	ZINC DIE CAST	NICKEL
	DESCRIPTION	MATERIAL	FINISH

UNLESS OTHERWISE SPECIFIED DIMENSIONS ARE IN MILLIMETERS

DIMENSIONS IN [ ] ARE IN INCHES FOR CUSTOMER REFERANCE ONLY

UNLESS OTHERWISE SPECIFIED TOLERANCES FOR INCHES ARE:

.XXX = ± 0.005"
.XX = ± 0.010"
.X = ± 0.020"

DO NOT SCALE DRAWING

APPROVALS		DATE
DRAWN	G.R.S.	04/11/02
CHECKED		
ISSUED		

Amphenol - Connex
CONNECTOR CORPORATION

TITLE: DUAL PORT BNC R/A PCB MOUNT RECEPTACLE – WHITE 50ohm

SIZE	FSCM NO.	DWG. NO.	REV.
A	99001	112704.DWG	NC
SCALE NA	PART NO. 112704		SHEET 1 OF 1