Alle Rechte vorbehalten/ *All rights reserved*

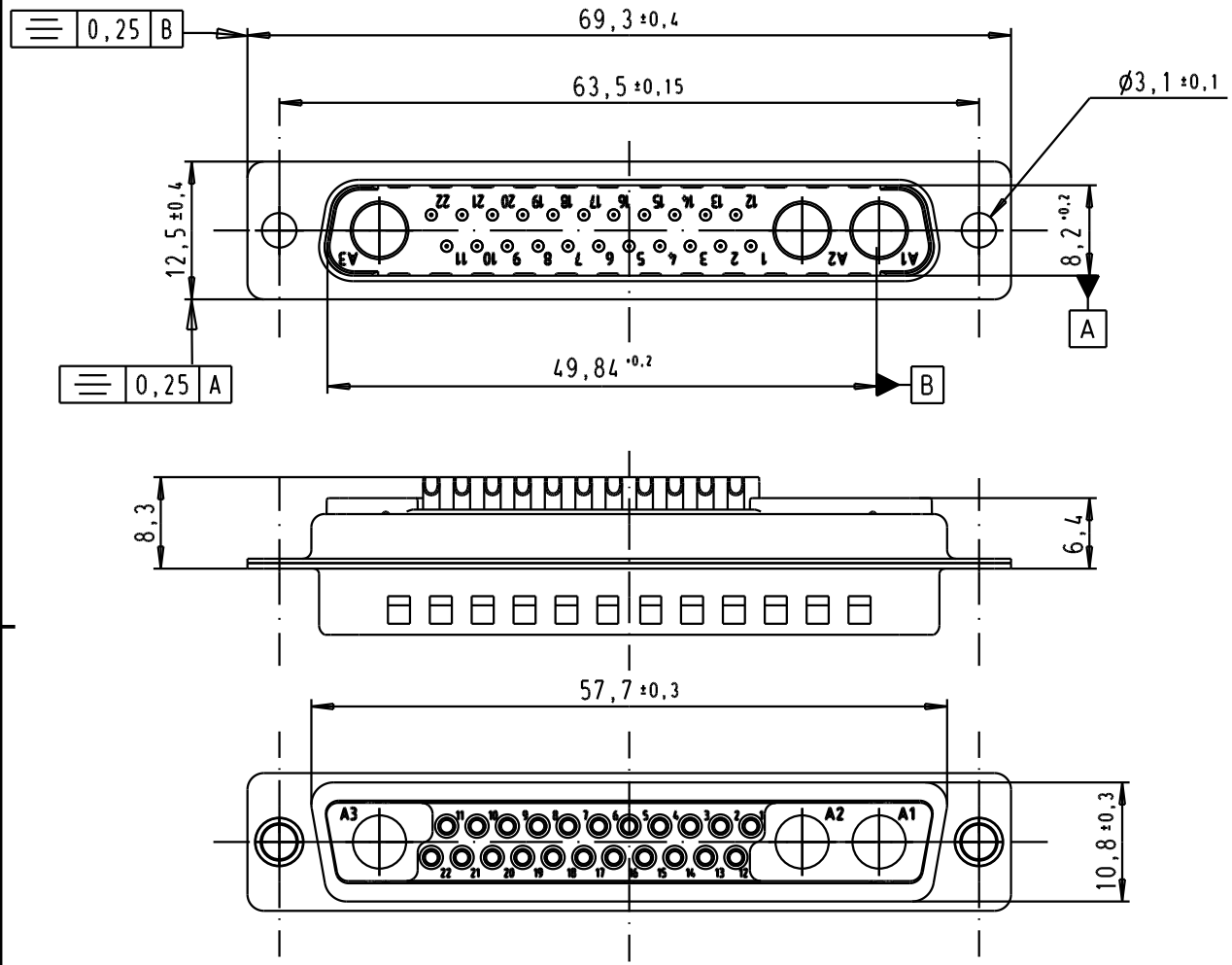

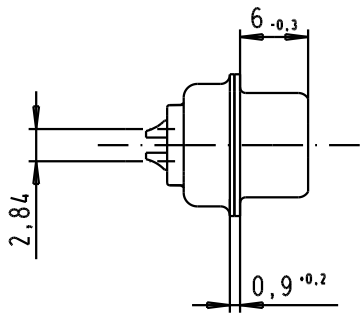

Solder bucket for AWG 20 Max

09 69 411 7253	PL3
09 69 411 5253	S4
part number	performance level

33100	15/09/05	JMDR
Mod.	Dat.	Name

	Dat.	Name
Detail.	15/09/05	JMDR
Insp.		
Stand.		

All Dim. in mm
Orig. Size DIN A 4

D-sub,male,straight,25W3 without power contacts, solder buckets, tin plated shell with dimples and holes

Maßstab/ Scale: 1,5 : 1

HARTING EURL
F-95972 Paris

TB 09 69 411 X253

Sub.

Blatt/ *Page* 1/1