THIS DRAWING IS UNPUBLISHED. RELEASED FOR PUBLICATION -,- .
© COPYRIGHT - By - ALL RIGHTS RESERVED.

| LOC | DIST |
|---|---|
| AD | 47 |

REVISIONS

| P | LTR | DESCRIPTION | DATE | DWN | APVD |
|---|---|---|---|---|---|
| | G2 | REVISED PER ECR-13-007580 | 07MAY13 | ML | SZ |

1. MATERIAL: STAINLESS STEEL.
2. FINISH: PASSIVATE.
3. LOCTITE DRI-LOC 204 APPLIED IN THIS AREA.
4. RECOMMENDED P.C. BOARD DRILLED HOLE IS "B" DIAMETER.

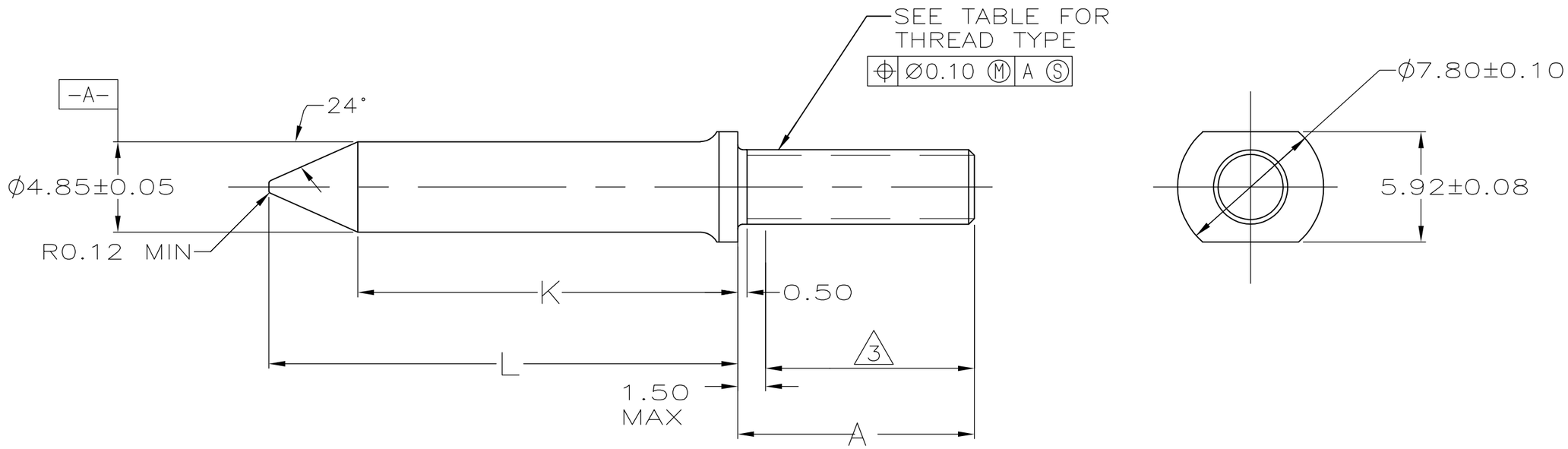


| L | K | 4 "B" DIA | A | THREAD TYPE | PART NUMBER |
|---|---|---|---|---|---|
| 31.25 | 26.48 | 4.25±0.08 | 12.7 | 8-32 UNC 2A | 1-223969-0 |
| 25.16 | 20.39 | 4.10±0.08 | 9.2 | M4 X 7-6G | 223969-7 |
| 25.16 | 20.39 | 4.25±0.08 | 12.7 | 8-32 UNC 2A | 223969-4 |
| 25.16 | 20.39 | 4.10±0.08 | 12.7 | M4 X 7-6G | 223969-1 |

THIS DRAWING IS A CONTROLLED DOCUMENT.

DIMENSIONS: mm

TOLERANCES UNLESS OTHERWISE SPECIFIED:

| | |
|---|---|
| 0 PLC | ± - |
| 1 PLC | ± - |
| 2 PLC | ± 0.13 |
| 3 PLC | ± - |
| 4 PLC | ± - |
| ANGLES | ± 0° 30' |

MATERIAL: 1

FINISH: 2 3

DWN J.LOCONDRO 27MAR97
CHK R.W.ELICKER 27MAR97
APVD D.SINISI 27MAR97
PRODUCT SPEC —
APPLICATION SPEC —
WEIGHT —

TE Connectivity

NAME: GUIDE PIN, UNIVERSAL POWER MODULE

| SIZE | CAGE CODE | DRAWING NO | RESTRICTED TO |
|---|---|---|---|
| A3 | 00779 | C-223969 | — |

CUSTOMER DRAWING | SCALE 4:1 | SHEET 1 OF 1 | REV G2

1470-19 (3/11)