THIS DRAWING IS UNPUBLISHED. RELEASED FOR PUBLICATION 20
© COPYRIGHT 20 BY - ALL RIGHTS RESERVED.

LOC	DIST
-	-

REVISIONS

P	LTR	DESCRIPTION	DATE	DWN	APVD
	C	REVISED PER ECO-11-019283	17OCT2011	KH	DY

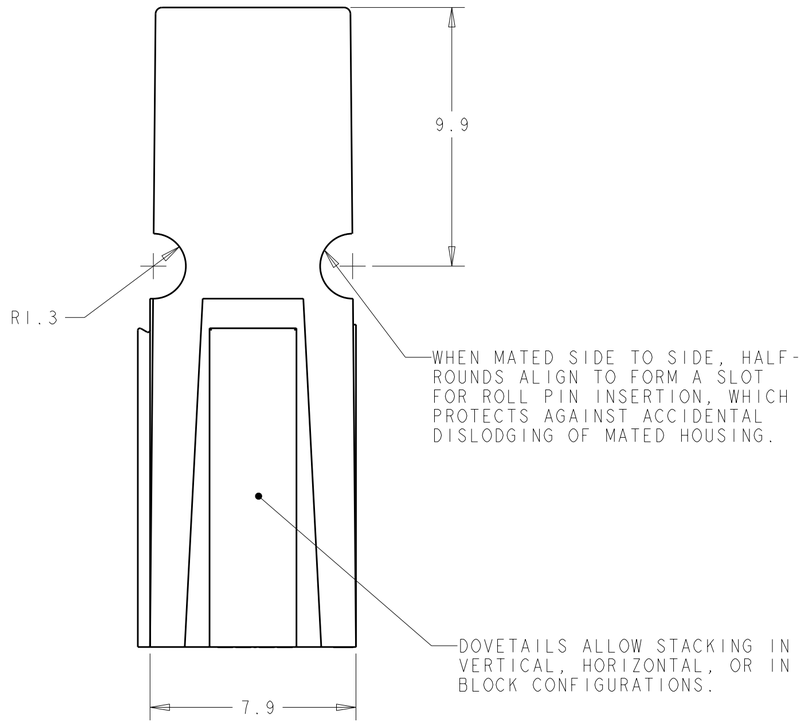

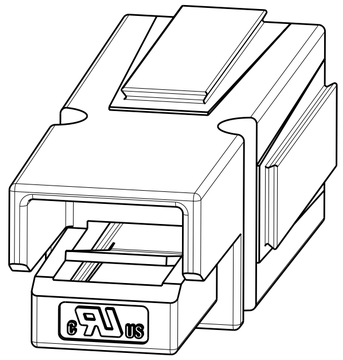

1. SPRING/HOUSING ASSEMBLIES ARE UL AND CSA RECOGNIZED PER FILE TBD.
2. THESE HOUSING ASSEMBLIES ACCOMMODATE TE CONNECTIVITY CONTACTS FOR WIRE RANGES FROM #20 AWG TO #10 AWG.
3. HOUSING: POLYCARBONATE, UL94V0.
   SPRING: STAINLESS STEEL.

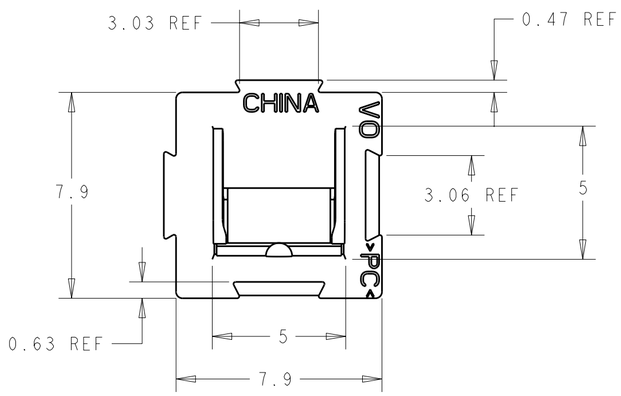

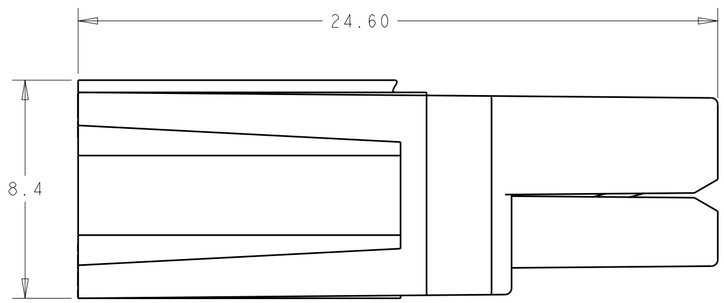

OBSOLETE	BROWN	1445957-9
	GRAY	1445957-8
	ORANGE	1445957-7
	YELLOW	1445957-6
	RED	1445957-5
	GREEN	1445957-4
	WHITE	1445957-3
	BLACK	1445957-2
	BLUE	1445957-1
	COLOR	PART NUMBER

THIS PRODUCT HAS PASSED VERIFICATION AND AGENCY APPROVALS TESTING AND IS COMPONENT RECOGNIZED PER UL 1977 AND CSA 22.2. TE CONNECTIVITY PRODUCT QUALIFICATION TESTING IS NOT YET COMPLETE.

THIS DRAWING IS A CONTROLLED DOCUMENT.

DIMENSIONS: mm

TOLERANCES UNLESS OTHERWISE SPECIFIED:
0 PLC ±0.13
1 PLC ±0.13
2 PLC ±0.13
3 PLC ±-
4 PLC ±-
ANGLES ±1

MATERIAL -
FINISH -

DWN B. HAYMAKER 06NOV01
CHK K. KETELSLEGER 25JAN02
APVD K. KETELSLEGER 25JAN02
PRODUCT SPEC -
APPLICATION SPEC -
WEIGHT -

TE Connectivity

NAME ASSEMBLY, 15/30/45A SINGLE POLE POWER PRODUCT -

SIZE	CAGE CODE	DRAWING NO	RESTRICTED TO
A2	00779	C-1445957	-

CUSTOMER DRAWING | SCALE 6:1 | SHEET 1 OF 1 | REV C

1471-9 (3/11)

Pro/ENGINEER DRAWING