THIS DRAWING IS UNPUBLISHED. RELEASED FOR PUBLICATION -,- .
© COPYRIGHT - BY TYCO ELECTRONICS CORPORATION. ALL RIGHTS RESERVED.

LOC	DIST
AD	47

REVISIONS

P	LTR	DESCRIPTION	DATE	DWN	APVD
	C	REVISED PER ECO-07-027626	28NOV07	DH	JE
	C1	REVISED PER ECO-10-000443	21JAN10	KK	HMR
	D	ECR-10-019054	15SEP10	DP	MQW

1. MATERIAL: GLASS FILLED POLYESTER.
2. PART NUMBER MARKED IN APPROXIMATE AREA SHOWN.
3. TO BE MEASURED AT BASE OF SHROUD.
4. OBSOLETE PARTS: OBSOLETE CIS STREAMLINING PER D.RENAUD/D.SINISI

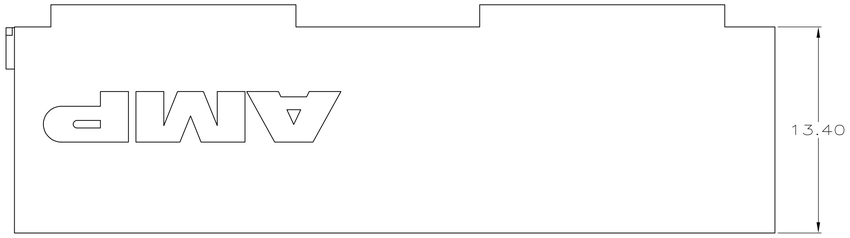

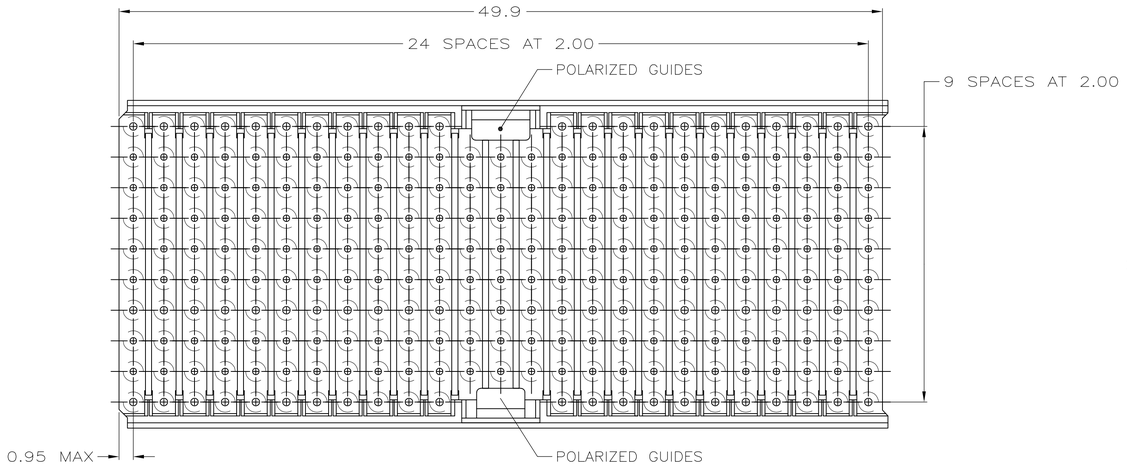

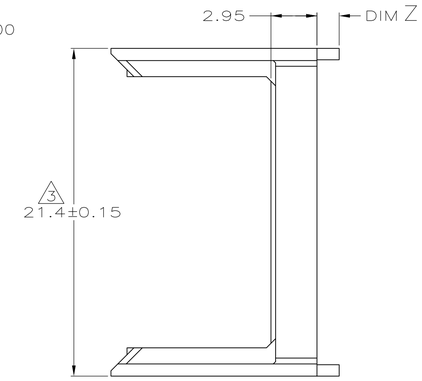

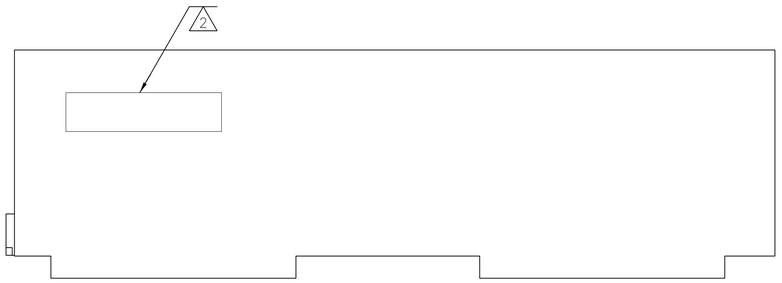

4 OBSOLETE	~~1.90~~	~~646726-7~~
	~~1.70~~	~~646726-6~~
	~~1.50~~	~~646726-5~~
	~~1.30~~	~~646726-4~~
	~~1.10~~	~~646726-3~~
	~~0.90~~	~~646726-2~~
	–	646726-1
	DIM Z	PART NUMBER

THIS DRAWING IS A CONTROLLED DOCUMENT.

DIMENSIONS: mm

TOLERANCES UNLESS OTHERWISE SPECIFIED:
0 PLC ± –
1 PLC ± 0.1
2 PLC ± 0.05
3 PLC ± –
4 PLC ± –
ANGLES ± –
±0.2

MATERIAL 1

FINISH –

DWN L. BRINER 8/20/00
CHK R. PATTERSON 8/20/00
APVD R. PATTERSON 8/20/00

PRODUCT SPEC –

APPLICATION SPEC –

WEIGHT –

CUSTOMER DRAWING

Tyco Electronics
Tyco Electronics Corporation
Harrisburg, PA 17105-3608

NAME
SHROUD, Z-PACK 2mm HM, TYPE D/E, 10 ROW, 244 POSITION
–

SIZE	CAGE CODE	DRAWING NO	RESTRICTED TO
A1	00779	C-646726	–

SCALE 5:1 SHEET 1 OF 1 REV D

AMP 4805 REV 31MAR2000