SIGN	DATE	DESCRIPTION	APPROVER
1	2009.11.13	The design is changed from the round hole to hexagonal hole	Jacke
2	2011.02.25	The wire is changed from 14-30(AWG) to 14-28(AWG)	Aaron
3	2011.02.25	Add is cULus	Aaron
4	2012.04.07	Change the structure of nut and add the glue process	Venter
		THIS IS CAD DRAWING, DO NOT REVISE MANUALLY!!!	

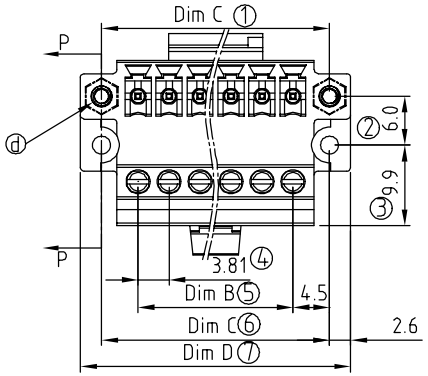

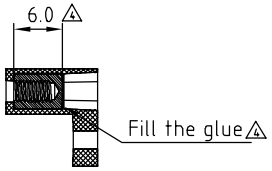

SECTION : P-P

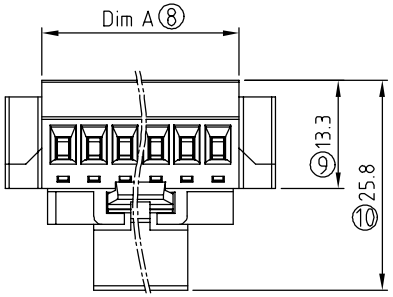

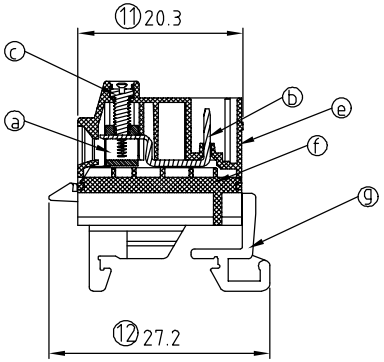

Material:

- Item a Clamp: Brass Ni plated
- Item b Male contact pin: Brass,Tin plated.
- Item c Terminal screw: Steel Zinc plating
- Item d With flange nut: Brass M2.5
- Item e Terminal housing: Thermoplastic (UL94V-0)
- Item f Terminal cover: Thermoplastic (UL94V-0)
- Item g Terminal(track): Thermoplastic (UL94V-0)

Electrical: cULus

- Voltage rating:300V
- Current rating:8A
- Wire range:
- 2 Solid wire(AWG):14-28
- 2 Stranded wire(AWG):14-28
- Torque(Lb-In):2.17
- Screw: M2
- Wire strip length:6 mm
- Withstanding Voltage:1.6KV
- Operating temperature:-40°C to +115°C
- 3 Safety Approval: c UL us

V5 xx 31 x 3 xxxx G

No. OF POLES
03 3 CONTACTS
04 4 CONTACTS
... ...
24 24 CONTACTS

Color
0 Black (RAL9005)
2 Red (RAL3001/D)
3 Orange(RAL2011/P)
4 Yellow(RAL1018/A)
5 Green(RAL6018/T)
6 Blue (RAL5015/A)
8 Grey(RAL7035/D)
9 White(RAL1102)
C Green(RAL6018/U)

0000: "@" Logo (Standard)
000A: "ANYTEK" Mark
Any special item by customer requst. please contact sales department.

G RoHS compliant (lead<4%) In copper Alloy

N = Number of poles
Dim A=Nx3.81+1.39
Dim B=(N-1)x3.81
Dim C=Nx3.81+5.19
Dim D=Nx3.81+10.39

	Dim A	Dim B	Dim C	Dim D
2-6p	±0.15	±0.15	±0.15	±0.15
7-12p	±0.20	±0.20	±0.20	±0.20
13-18p	±0.30	±0.30	±0.30	±0.30
19-24p	±0.35	±0.35	±0.35	±0.35

ANYTEK

CUSTOMER COPY

ALL RIGHTS RESERVED. REPRODUCTION OR ISSUE TO THIRD PARTIES IN ANY FORM WHATEVER IS NOT PERMITTED WITHOUT WRITTEN AUTHORITY FROM THE PROPRIETOR. PROPERTY OF ANYTEK TECHNOLOGY CO., LTD

TITLE	V5 3.81 mm W/ Flange Dinrail holder A type Series				
PART NO.	V5xx31x3xxxxG		DWG NO.	8V50104	
APPROVED	CHECKED	DESIGNED	DRAWN	CUST NO.	
		Venter 2012.04.07	Venter 2012.04.07	UNIT: mm / SCALE: NONE / SHEET: 01/01 / REV.: E	

Tolerance: X. ±0.50; X.X ±0.30; X.XX ±0.10; X° ±1°