SIGN	DATE	DESCRIPTION	APPROVER
1	12/04`10	The DWG NO. is changed from 8T30007 to 8T30006	Tason
2	12/04`10	Add the "tuv" Safety Approval	Tason

THIS IS CAD DRAWING, DO NOT REVISE MANUALLY!!!

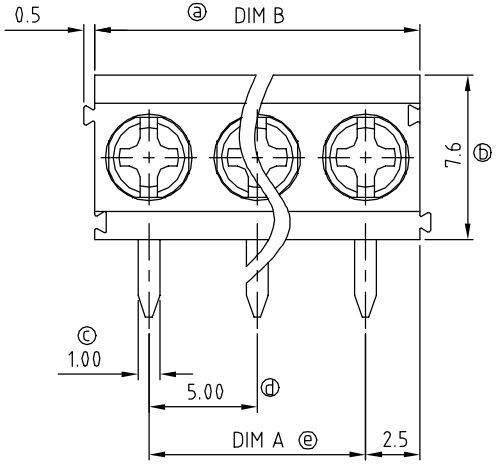

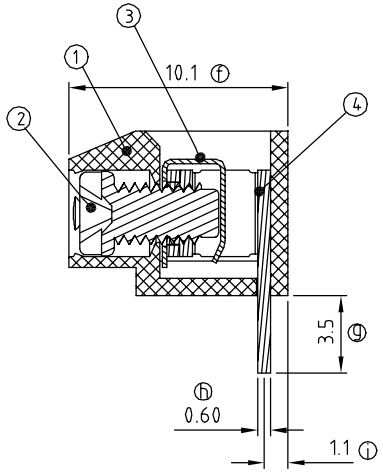

Materials

Item 1	insulating body	Thermoplastic (UL94V-0)
Item 2	Steel screw	Screw, Zinc plating("+/-" slot type)
Item 3	Wire guard	Stainless steel
Item 4	Terminal body	Brass Tin plated

Electrical UL TUV 2

- Voltage rating: 300VAC/250VAC
- Current rating: 8A/12A
- Wire range:
- Solid wire(AWG): 14-26/0.2-2.5mm^2
- Stranded wire(AWG): 14-26/0.2-2.5mm^2
- Torque: 2.6Lb-In/0.4Nm
- Screw: M2.5
- Wire strip length: 5-6mm
- Withstanding Voltage: 1.6KV
- Operating temperature: -40°C to +115°C/ -40°C to +105°C
- Soldering temperature: 250°C±10°C/5 Sec
- Safety Approval: TÜV

T3 xx 04 x 3 xxxx G

02 2 CONTACTS	Color	0000 "@" Logo	RoHS
03 3 CONTACTS	0 Black (RAL9005)	000A "ANY" Logo	Pb<40,000ppm
... ...	5 Green(RAL6018/T)	... ...	
12 12 CONTACTS	6 Blue (RAL5015/A)	Any special item by customer request, please contact sales department	
	8 Grey(RAL7035/D)		

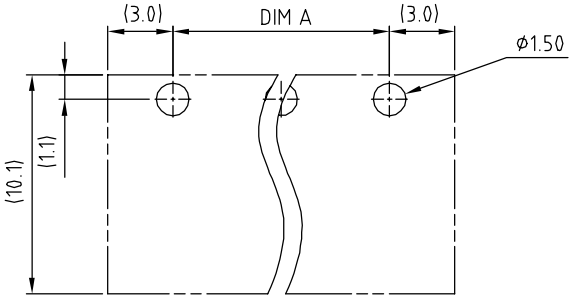

P.C.B. LAYOUT

N = Number of poles
Dim A= (N-1) X5.0
Dim B= Nx5.0

	Dim A	Dim B
2P	±0.05	±0.05
3-6p	±0.15	±0.15
7-12p	±0.20	±0.20
13-18p	±0.30	±0.30
19-24p	±0.40	±0.40

ANYTEK

CUSTOMER COPY

ALL RIGHTS RESERVED. REPRODUCTION OR ISSUE TO THIRD PARTIES IN ANY FORM WHATEVER IS NOT PERMITTED WITHOUT WRITTEN AUTHORITY FROM THE PROPRIETOR. PROPERTY OF ANYTEK TECHNOLOGY CO., LTD

TITLE	T3 5.0 Series 90°				
PART NO.	T3xx04x3xxxxG			DWG NO.	8T30006 1
APPROVED	CHECKED	DESIGNED	DRAWN	CUST NO.	
		Tason 12/04`10	熊海燾 11/08`06	UNIT: mm / SCALE: NONE / SHEET: 01/01	REV.: C

Tolerance	
X.	±0.50
X.X	±0.30
X.XX	±0.10
X°	±1°