THIS DRAWING IS UNPUBLISHED. RELEASED FOR PUBLICATION 20
© COPYRIGHT 20 BY - ALL RIGHTS RESERVED.

REVISIONS

P	LTR	DESCRIPTION	DATE	DWN	APVD
	A	INITIAL	23JUN2015	DW	CW
	A1	ECR-16-008646	25JUN2016	BS	CW

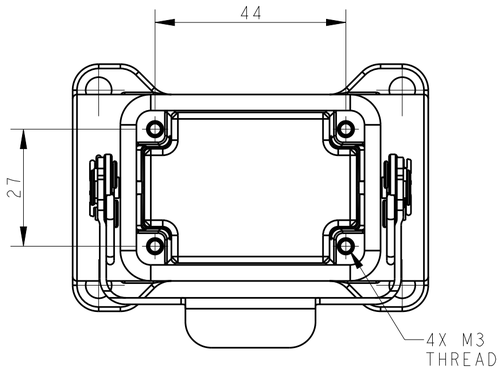

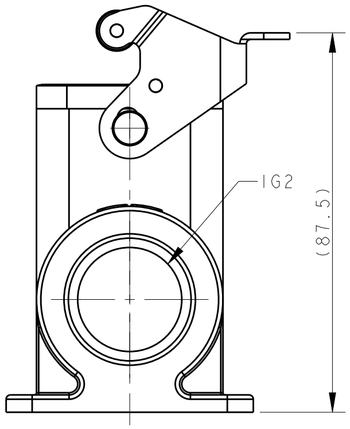

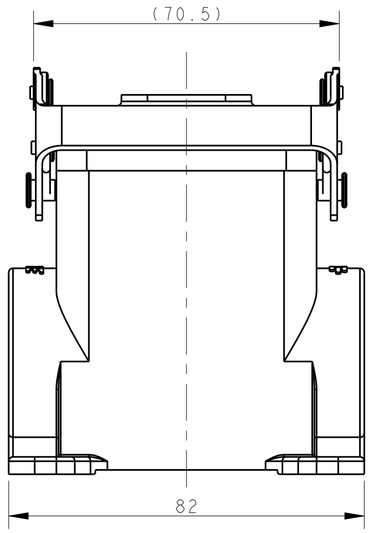

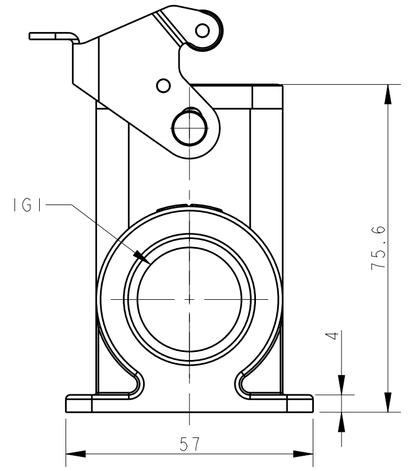

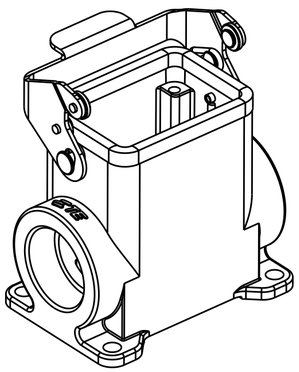

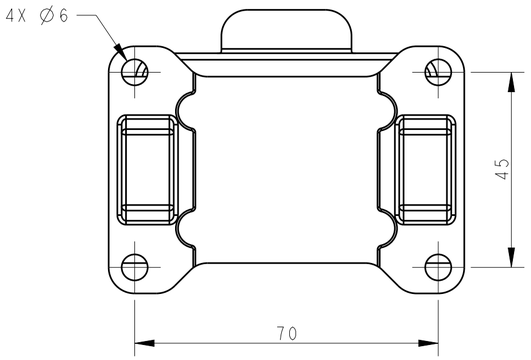

NOTES:
1. TECHNICAL CHARACTERISTICS:
   HOUSING MATERIAL: DIE CAST ALUMINIUM ALLOY
   SURFACE: POWDER COATED, GREY
   DEGREE OF PROTECTION: IP65 (MATED)

注释：
1. 技术参数：
   表面安装下壳材料： 铝合金
   表面处理： 粉末涂层，灰色
   防护等级： IP65(配合)

PART NUMBER 料号	PART DESCRIPTION 描述	IG1	IG2
T1650062121-000	H6B-SGRHS-PG21	H6B HOUSING, SURFACE MOUNTED,STAINLESS STEEL SINGLE LOCKING,1 ENTRY HOLE, HIGH CONSTRUCTION H6B下壳 表面安装、不锈钢单扣、1个进线孔、高结构	PG21	-
T1650062121-001	H6B-SGRHS-PG21	H6B HOUSING, SURFACE MOUNTED,STAINLESS STEEL SINGLE LOCKING,1 ENTRY HOLE WITH REVERSE TYPE, HIGH CONSTRUCTION H6B下壳 表面安装、不锈钢单扣、反向1个进线孔、高结构	-	PG21
T1650062129-000	H6B-SGRHS-PG29	H6B HOUSING, SURFACE MOUNTED,STAINLESS STEEL SINGLE LOCKING,1 ENTRY HOLE, HIGH CONSTRUCTION H6B下壳 表面安装、不锈钢单扣、1个进线孔、高结构	PG29	-
T1650062132-000	H6B-SGRHS-M32	H6B HOUSING, SURFACE MOUNTED,STAINLESS STEEL SINGLE LOCKING,1 ENTRY HOLE, HIGH CONSTRUCTION H6B下壳 表面安装、不锈钢单扣、1个进线孔、高结构	M32	-
T1650062221-000	H6B-SGRHS-2PG21	H6B HOUSING, SURFACE MOUNTED,STAINLESS STEEL SINGLE LOCKING,2 ENTRY HOLE, HIGH CONSTRUCTION H6B下壳 表面安装、不锈钢单扣、2个进线孔、高结构	PG21	PG21
T1650062229-000	H6B-SGRHS-2PG29	H6B HOUSING, SURFACE MOUNTED,STAINLESS STEEL SINGLE LOCKING,2 ENTRY HOLE, HIGH CONSTRUCTION H6B下壳 表面安装、不锈钢单扣、2个进线孔、高结构	PG29	PG29
T1650062232-000	H6B-SGRHS-2M32	H6B HOUSING, SURFACE MOUNTED, STAINLESS STEEL SINGLE LOCKING,2 ENTRY HOLE, HIGH CONSTRUCTION H6B下壳 表面安装、不锈钢单扣、2个进线孔、高结构	M32	M32

THIS DRAWING IS A CONTROLLED DOCUMENT.

DIMENSIONS: mm

TOLERANCES UNLESS OTHERWISE SPECIFIED:
0 PLC ±-
1 PLC ±-
2 PLC ±-
3 PLC ±-
4 PLC ±-
ANGLES ±-

MATERIAL - -
FINISH - -

DWN David Wang 23JUN2015
CHK Chris Wang 23JUN2015
APVD Xiang Xu 23JUN2015
PRODUCT SPEC 108-137013
APPLICATION SPEC 114-137013
WEIGHT -

TE Connectivity

NAME H6B-SGRHS-M/PG

SIZE	CAGE CODE	DRAWING NO	RESTRICTED TO
A2	00779	C-T1650062XXX000	-

Customer Drawing | SCALE 1:1 | SHEET 1 OF 1 | REV A1