THIS DRAWING IS UNPUBLISHED. RELEASED FOR PUBLICATION 20
© COPYRIGHT 20 BY - ALL RIGHTS RESERVED.

REVISIONS

P	LTR	DESCRIPTION	DATE	DWN	APVD
	A	RELEASED PER ECO-19-001811	05FEB2019	DCB	AT

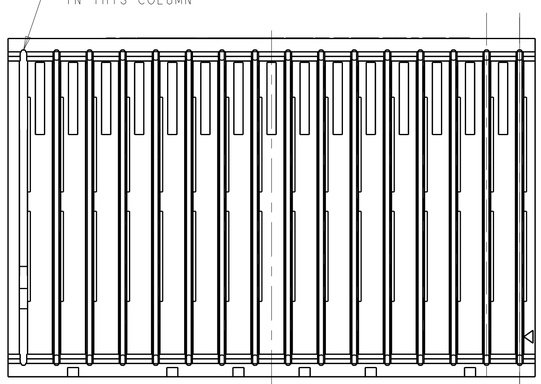

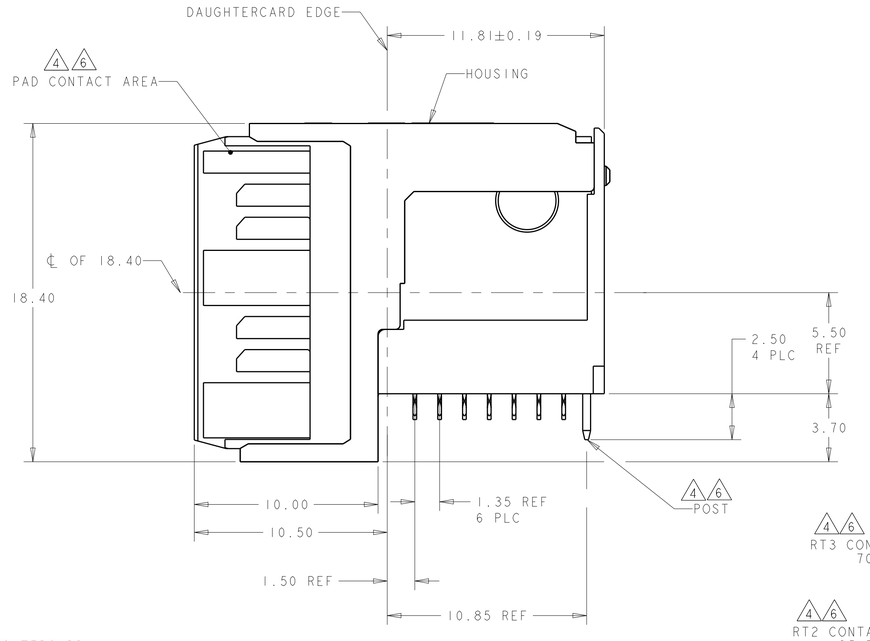

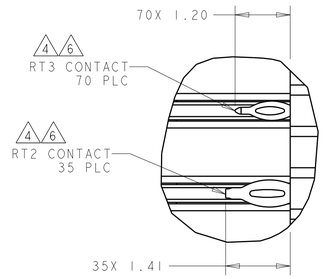

DETAIL B
SCALE 15:1

1. HOUSING: LCP, UL94V0, COLOR: BLACK.
   CONTACT: PHOSPHOR BRONZE.
   POST: BRASS WIRE
2. PLATED THROUGH HOLE PER TE SPEC 114-13056, FIGURE 4.
3. PLATED THRU HOLE SPECIFICATION:
   DRILLED HOLE: Ø0.40±0.02
   0.025-0.050 THICK COPPER PLATING (MAX HARDNESS 150 KNOOP)
   FINISH OPTIONS:
   0.0038-0.0124 HOT AIR SOLDER LEVELING (HASL) TIN-LEAD (SnPb)
   0.0005-0.004 IMMERSION TIN (Sn)
   0.0002-0.0005 ORGANIC SOLDERABILITY PRESERVATIVE (OSP)
   0.0001-0.0005 IMMERSION SILVER (Ag)
   0.0001-0.0005 IMMERSION GOLD OVER 0.00127-0.0076 NICKEL (ENIG)
   FINISH HOLE DIAMETER AFTER PLATING = Ø0.31 REF
4. CONTACT: 1.27µm MIN GOLD IN PAD CONTACT AREA
   1.27µm MIN TIN-LEAD ON PCB TAIL
   OVER 1.27µm MIN NICKEL OVER ALL.
   POST 1.27µm MIN NICKEL PLATED.
5. SEE TABLE 1 FOR INTERCONNECTIONS TO BACKPLANE CONNECTOR.
6. CONTACT: 1.27µm MIN GOLD IN PAD CONTACT AREA,
   1.27µm MIN TIN ON PCB TAIL OVER 1.27µm MIN.
   NICKEL OVER ALL.
   POST: 1.27µm MIN NICKEL PLATED.

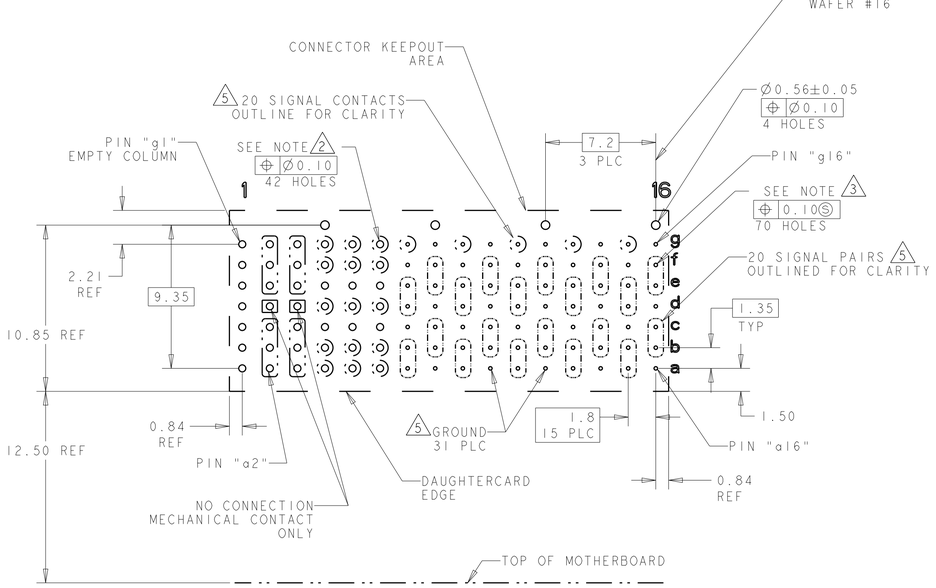

PC BOARD LAYOUT
(CONNECTOR SIDE)
SCALE 5:1

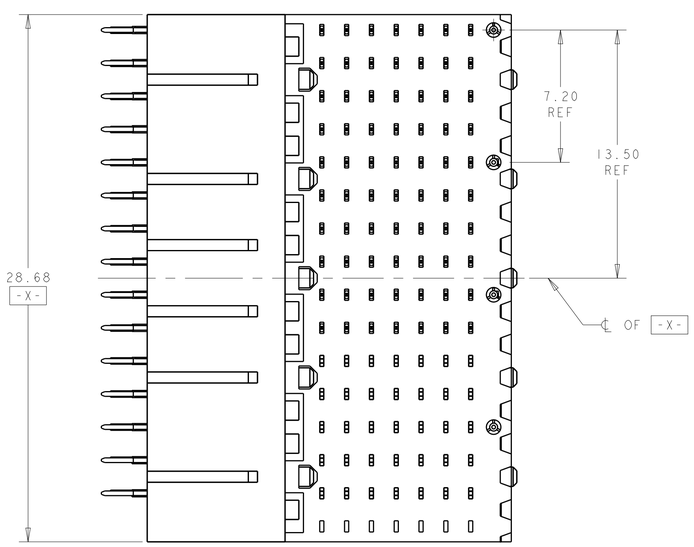

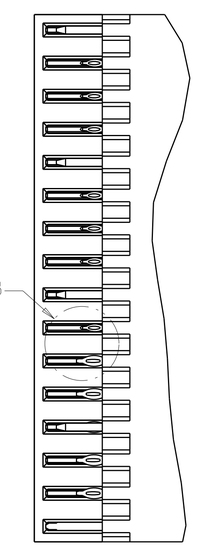

TABLE 1
INTERCONNECTIONS WITH BACKPLANE CONNECTOR
2302791 OR 2302792

TYPICAL INTERCONNECTIONS FOR COLUMN (WAFER): 7,9,11,13,15		
CONTACT USAGE	DAUGHTERCARD CONNECTOR PIN	BACKPLANE CONNECTOR PIN
SIGNAL PAIR	ax	ax
	bx	bx
SIGNAL PAIR	dx	ex
	ex	fx
SIGNAL	gx	ix
GROUNDS	cx, fx, (ALL COMMONED)	cx,dx,gx,hx

TYPICAL INTERCONNECTIONS FOR COLUMN (WAFER): 8,10,12,14,16		
CONTACT USAGE	DAUGHTERCARD CONNECTOR PIN	BACKPLANE CONNECTOR PIN
SIGNAL PAIR	bx	cx
	cx	dx
SIGNAL PAIR	ex	gx
	fx	hx
GROUNDS	ax,dx,gx (ALL COMMONED)	ax,bx,ex, fx,ix

TYPICAL INTERCONNECTIONS FOR COLUMN (WAFER): 4, 5, 6		
CONTACT USAGE	DAUGHTERCARD CONNECTOR PIN	BACKPLANE CONNECTOR PIN
SIGNAL	ax	bx
SIGNAL	bx	cx
SIGNAL	dx	ex
SIGNAL	fx	gx
SIGNAL	gx	hx
GROUNDS	cx,ex (ALL COMMONED)	ax,dx,fx,ix

TYPICAL INTERCONNECTIONS FOR COLUMN (WAFER): 2, 3		
CONTACT USAGE	DAUGHTERCARD CONNECTOR PIN	BACKPLANE CONNECTOR PIN
POWER	ax,bx,cx	ax,bx,cx,dx
POWER	ex,fx,gx	fx,gx,hx,ix
NOT CONNECTED	dx	ex

NOTE: "x" DESIGNATES THE COLUMN NUMBER

6	2302794-2
4	2302794-1
PLATING	PART NO

1	2	3	4	5	6	7	8	9	10	11	12	13	14	15	16	
			P				P				P				P	
N	2	2	2	2	2	3	3	3	3	3	3	3	3	3	3	g
N	2	2	2	2	2	3	3	3	3	3	3	3	3	3	3	f
N	2	2	2	2	2	3	3	3	3	3	3	3	3	3	3	e
N	2	2	2	2	2	3	3	3	3	3	3	3	3	3	3	d
N	2	2	2	2	2	3	3	3	3	3	3	3	3	3	3	c
N	2	2	2	2	2	3	3	3	3	3	3	3	3	3	3	b
N	2	2	2	2	2	3	3	3	3	3	3	3	3	3	3	a

2 = RT2 CONTACT (SEE NOTE 2)

3 = RT3 CONTACT (SEE NOTE 3)
N = NO CONTACT
P = POST

THIS DRAWING IS A CONTROLLED DOCUMENT.

DIMENSIONS: mm

TOLERANCES UNLESS OTHERWISE SPECIFIED:
0 PLC ±-
1 PLC ±0.5
2 PLC ±0.13
3 PLC ±-
4 PLC ±-
ANGLES ±1°0'

MATERIAL 1

FINISH - SEE TABLE

DWN K. MILLER 10JUL2017
CHK A. TSANG 10JUL2017
APVD -
PRODUCT SPEC 108-2072-3
APPLICATION SPEC 114-163004
WEIGHT 9.98g

TE Connectivity

NAME RIGHT-ANGLE PLUG ASSY, RTM, CENTER, DIFFERENTIAL, SINGLE-ENDED AND POWER VPX, MULTIGIG RT 3

SIZE A1 | CAGE CODE 00779 | DRAWING NO C-2302794 | RESTRICTED TO -

CUSTOMER DRAWING | SCALE 5:1 | SHEET 1 OF 1 | REV A

4805 (3/13)