Alle Rechte vorbehalten/ *All rights reserved*

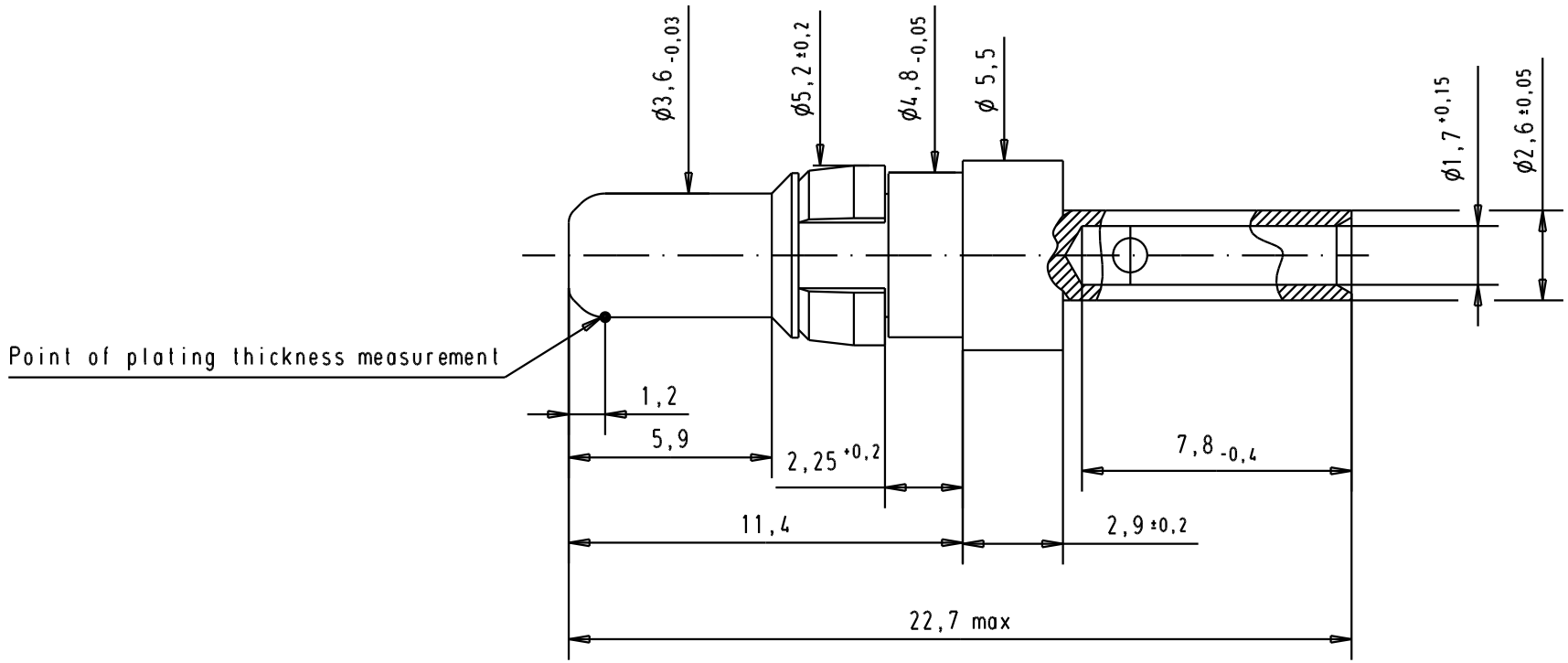

Crimping tool: 09 99 000 0509
Positioner: 09 99 000 0504

Part number	Plating		Mod.	Dat.	Name
09692827420	Mating area	0,2 µm Au			
	Termination area	0,2 µm Au			
09692825420	Mating area	0,8 µm Au	32809	21/04/05	AL
	Termination area	0,2 µm Au	31887	14/04/04	JH

	Dat.	Name
Detail.	14/04/04	JH
Insp.		
Stand.		

All Dim. in mm
Orig. Size DIN A 4

HARTING EURL
F-95972 Paris

Male High power contact, 10A, straight cable termination, crimp for AWG 16-20

Sub.

TB 09 69 282 x420

Maßstab/ *Scale* 5:1

Blatt/ *Page* 1/1