PRODUCT NO	DIM L	RECOMMENDED P.C. BOARD THICKNESS
10018182-001LF	2.70	1.57mm (0.062") / 2.36mm (0.093")
10018182-011LF	3.70	2.36mm (0.093")

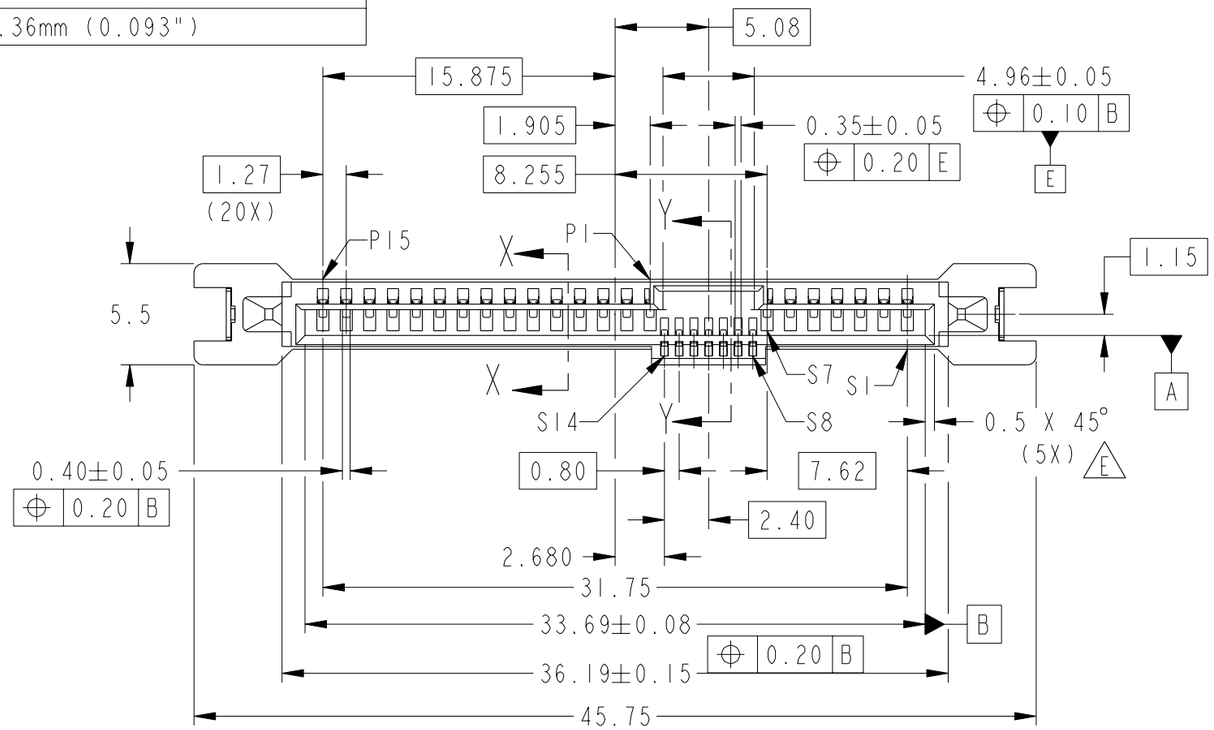

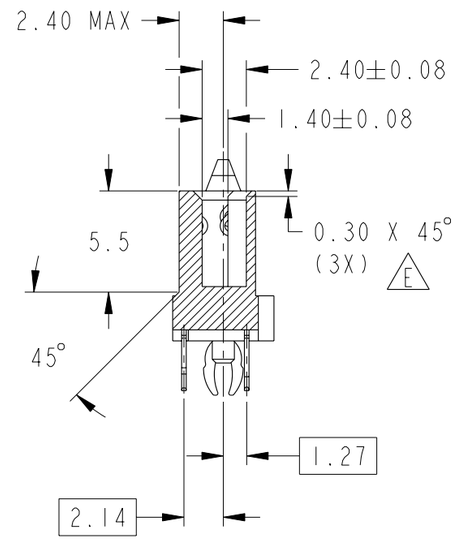

SECTION Y - Y

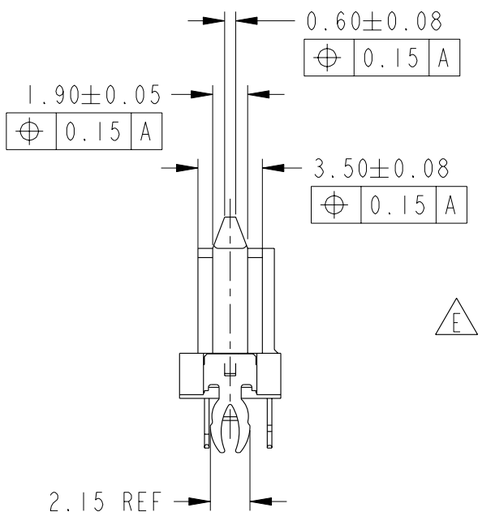

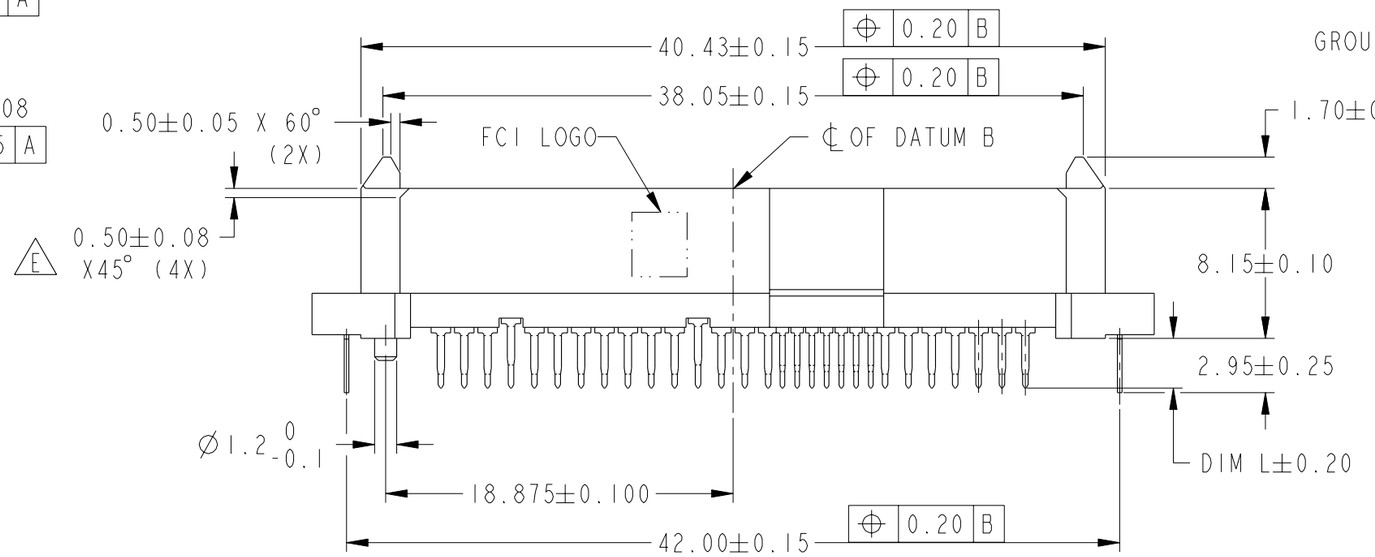

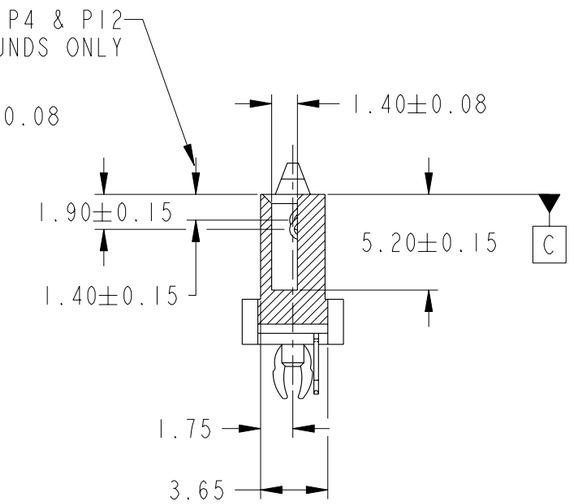

SECTION X - X

spec ref	-			dr	GL LOO	2004-02-27	projection	MM	size A3	scale 3:1
tolerance std ISO 406 ISO 1101	TOLERANCES UNLESS OTHERWISE SPECIFIED			eng	GL LOO	2004-02-27				
				chr	GL LOO	2010-10-28			ecn no	S10-0228
				appr	JOEY NG	2010-10-28	product family	-	rel level	-
surface - ISO 1302	linear	0.X	±-	FCI	title SAS RECEPTACLE VERTICAL TH TYPE ASSY		dwg no 10018182		rev E
		0.XX	±0.20						
		0.XXX	±-						
	angular	0°	±2°	www.fci.com	cat. no. -		Product - Customer Drw		sheet 1 of 2

Copyright FCI.

NOTES:

1. MATERIAL :
   1) HOUSING : HIGH TEMP THERMOPLASTIC, UL 94V-0
      COLOR : BLACK
   2) TERMINAL : COPPER ALLOY
   3) HOLD DOWN : COPPER ALLOY

2. FINISH :
   1) TERMINAL : 30µ" Au PLATING (CONTACT POINT) OVER 50µ" NICKEL
   2) SOLDER TAIL : 50µ" MIN Sn OVER 50µ" NICKEL
   3) HOLD DOWN : 50µ" MIN Sn OVER 50µ" NICKEL

3. PER SFF REV 1.1 EXCEPT 0.8mm PITCH BUMP AREA.

4. THE STD PACKAGING IS IN TRAY.

5. THE HOUSING WILL WITHSTAND EXPOSURE TO 260°C PEAK TEMPERATURE FOR 10 SECONDS IN A WAVE SOLDER APPLICATION WITH A 1.57mm MINIMUM THICK CIRCUIT BOARD.

6. THIS PRODUCT MEETS EUROPEAN UNION DIRECTIVES AND OTHER COUNTRY REGULATIONS AS DESCRIBED IN GS-22-008.

E 7. PART NUMBERS ENDING IN "LF" MEANS FOR NOTE 6 LEAD FREE IDENTIFICATION.
~~P\N XXXXXXXX-XXXLF IS EQUIVALENT TO PREVIOUS P/N XXXXXXXX-XXX.~~

E 8. A E SYMBOL WILL BE NEXT TO ANY DIMENSION, VIEW, OR NOTE WHICH HAS BEEN MODIFIED WITH THE CURRENT DRAWING REVISION.

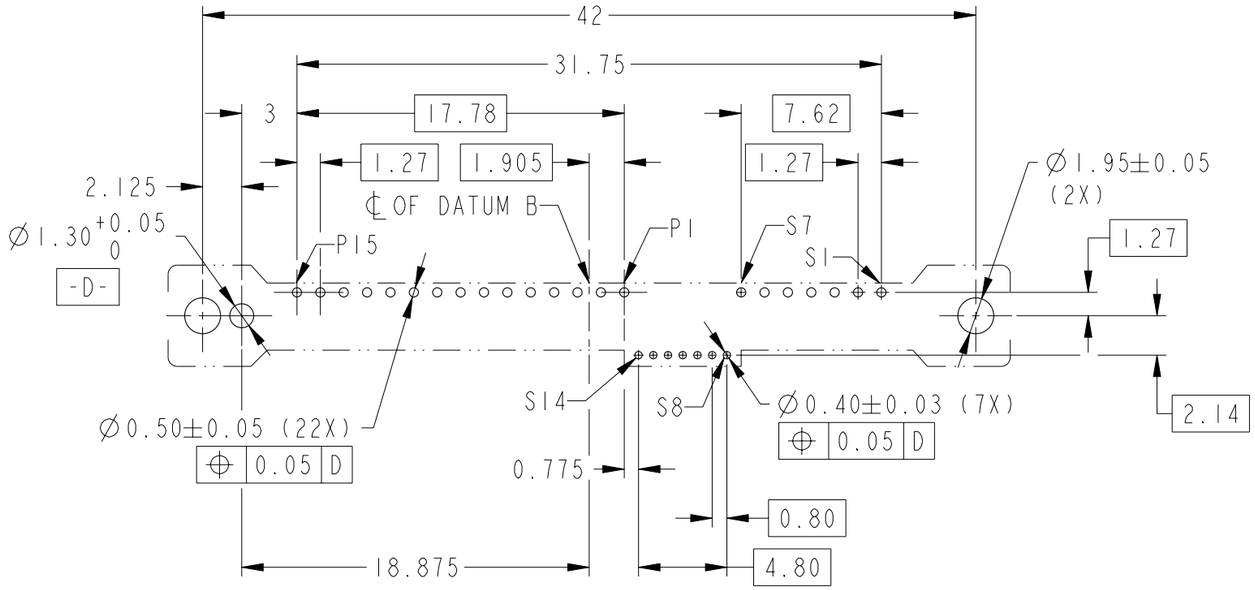

RECOMMENDED P.C.B LAYOUT

Copyright FCI.

spec ref -			dr	GL LOO	2004-02-27	projection	MM	size A3 / scale 3:1
tolerance std ISO 406 ISO 1101	TOLERANCES UNLESS OTHERWISE SPECIFIED		eng	GL LOO	2004-02-27			
			chr	GL LOO	2010-10-15			ecn no S10-0228
			appr	JOEY NG	2010-10-15	product family -		rel level -
surface -	linear	0.X	±-	FCI	title SAS RECEPTACLE VERTICAL TH TYPE ASSY		dwg no 10018182	rev E
		0.XX	±0.20					
		0.XXX	±-					
ISO 1302	angular	0°	±2°	www.fci.com	cat. no. -	Product - Customer Drw		sheet 2 of 2