THIS DRAWING IS UNPUBLISHED. RELEASED FOR PUBLICATION - , - .
© COPYRIGHT - By - ALL RIGHTS RESERVED.

| LOC | DIST |
|---|---|
| AF | 50 |

REVISIONS

| P | LTR | DESCRIPTION | DATE | DWN | APVD |
|---|---|---|---|---|---|
| | A1 | REVISED PER ECR-12-007322 | 20APR12 | KH | GJ |

1 SPECIFICATION: WIRE RANGE; #18-#34 AWG. 0.16-1.02 mm [.006-.040] DIA. COPPER MAGNET WIRE.

2 POCKET RECOMMENDATION: 1601425 EXCEPT 7.61 [.300] HIGH, ALTERNATE POCKET 1601431

3 TERMINAL APPLICATION TO COMPLY WITH TYCO ELECTRONICS SPEC 114-13166, CONSULT TYCO ELECTRONICS PRODUCT ENGINEERING FOR PROPER INSERTION DEPTH.

4 POST PLATED TIN OVER COPPER

5 2 TERMINALS SHOWN FOR ILLUSTRATION PURPOSES.

6 NON-STANDARD PACKAGING. REDUCED QUANTITY. REEL WITH FLUTED PLASTIC FLANGES AND PAPER CORE. PAPER INTERLEAVING. PLACED IN A PLASTIC BAG.

7 NON-STANDARD PACKAGING. ALL PLASTIC REEL. PLASTIC INTERLEAVING. PLACED IN A PLASTIC BAG.

8 NON-STANDARD DOUBLE BAG.

9 PRELIMINARY - NOT FOR PRODUCTION

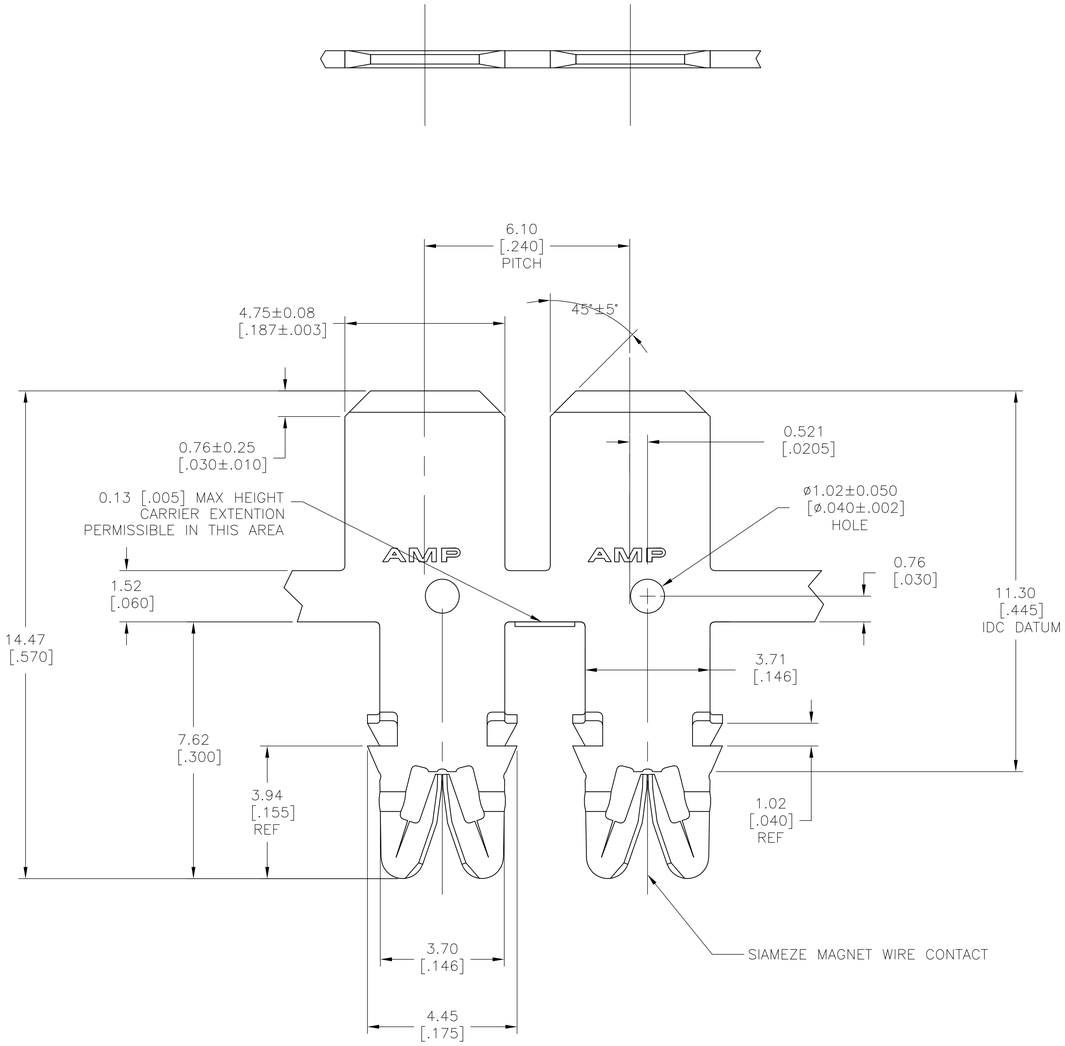


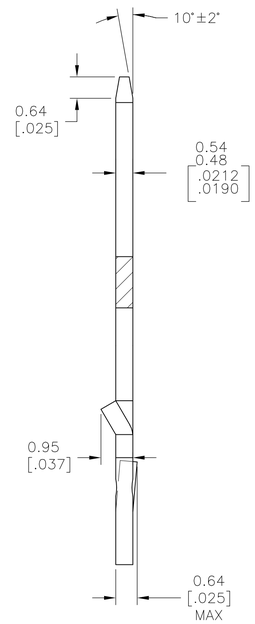


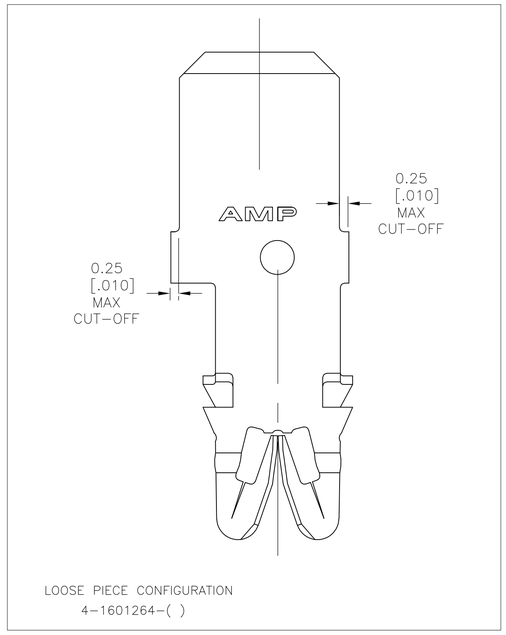


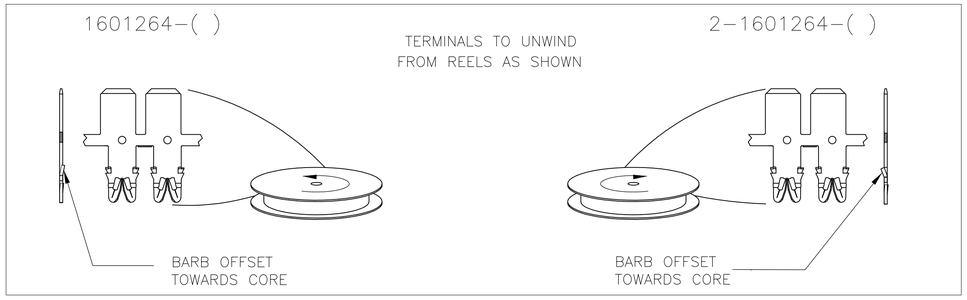


| PACKAGING | PART NUMBER |
|---|---|
| 8 | 9 4-1601264-2 |
| 7 | 1601264-4 |
| 6 | 9 1601264-3 |
| STANDARD | 9 1601264-2 |

THIS DRAWING IS A CONTROLLED DOCUMENT.

DIMENSIONS: mm [INCHES]

TOLERANCES UNLESS OTHERWISE SPECIFIED:
0 PLC ± -
1 PLC ± -
2 PLC ± 0.13 [.005]
3 PLC ± -
4 PLC ± -
ANGLES ± 2°

MATERIAL: FULL HARD BRASS

FINISH: 4

DWN JR RUTH 10MAR11
CHK G. JACONO 10MAR11
APVD G. JACONO 10MAR11

PRODUCT SPEC: 108-2085
APPLICATION SPEC: - 3
WEIGHT: -

TE Connectivity

NAME: STANDARD RANGE WIRE TO 4.75 [.187] X 0.51 [.020], OFFSET TAB SIAMEZE TERMINAL

SIZE A1 | CAGE CODE 00779 | DRAWING NO C-1601264 | RESTRICTED TO -

CUSTOMER DRAWING | SCALE 11:1 | SHEET 1 OF 1 | REV A1